VARIAN

vacuum technologies



# Turbo-V 300 ICE controller

## Model 969-9433
## Model 969-9533

*MANUALE ISTRUZIONI*

*BEDIENUNGSHANDBUCH*

*NOTICE DE MODE D'EMPLOI*

*MANUAL DE ISTRUCCIONES*

*MANUAL DE ISTRUÇÕES*

*BEDRIJFSHANDLEIDING*

*ISTRUKSTIONSBOG*

*BRUKSANVISNING*

*INSTRUKSJON MANUAL*

*OHJEKÄSIKIRJA*

ΟΔΗΓΙΕΣ ΧΡΗΣΕΩΣ

*INSTRUCTION MANUAL*

87-900-902-01 (G)
JANUARY 2002

# *Turbo-V 300 ICE Controller*

VARIAN

## DICHIARAZIONE DI CONFORMITÀ

[illegible]

| | |
|---|---|
| EN CENELEC 55011 | [illegible] |
| IEC 1000-4-2 (ex 801-2) | [illegible]<br>Parte 2: [illegible] |
| IEC 1000-4-3 (ex 801-3) | [illegible]<br>Parte 3: [illegible] |
| IEC 1000-4-4 (ex 801-4) | [illegible]<br>Parte 4: [illegible] |
| EN 61010-1 | [illegible]<br>Parte 1: [illegible] |

## KONFORMITÄTSERKLÄRUNG

[illegible]

| | |
|---|---|
| EN CENELEC 55011 | [illegible] |
| IEC 1000-4-2 (ex 801-2) | [illegible]<br>Teil 2: [illegible] |
| IEC 1000-4-3 (ex 801-3) | [illegible]<br>Teil 3: [illegible] |
| IEC 1000-4-4 (ex 801-4) | [illegible]<br>Teil 4: [illegible] |
| EN 61010-1 | [illegible]<br>Teil 1: [illegible] |

## DECLARATION DE CONFORMITE

[illegible]

| | |
|---|---|
| EN CENELEC 55011 | [illegible] |
| IEC 1000-4-2 (ex 801-02) | [illegible]<br>Partie 2: [illegible] |
| IEC 1000-4-3 (ex 801-03) | [illegible]<br>Partie 3: [illegible] |
| IEC 1000-4-4 (ex 801-04) | [illegible]<br>Partie 4: [illegible] |
| EN 61010-1 | [illegible] |

## DECLARACIÓN DE CONFORMIDAD

[illegible]

| | |
|---|---|
| EN CENELEC 55011 | [illegible] |
| IEC 1000-4-2 (ex 801-2) | [illegible]<br>Parte 2: [illegible] |
| IEC 1000-4-3 (ex 801-3) | [illegible]<br>Parte 3: [illegible] |
| IEC 1000-4-4 (ex 801-4) | [illegible]<br>Parte 4: [illegible] |
| EN 61010-1 | [illegible]<br>Parte 1: [illegible] |

## DECLARAÇÃO DE CONFORMIDADE

[illegible]

| | |
|---|---|
| EN CENELEC 55011 | [illegible] |
| IEC 1000-4-2 (ex 801-2) | [illegible]<br>Parte 2: [illegible] |
| IEC 1000-4-3 (ex 801-3) | [illegible]<br>Parte 3: [illegible] |
| IEC 1000-4-4 (ex 801-4) | [illegible]<br>Parte 4: [illegible] |
| EN 61010-1 | [illegible]<br>Parte 1: [illegible] |

## CONFORMITEITSVERKLARING

[illegible]

| | |
|---|---|
| EN CENELEC 55011 | [illegible] |
| IEC 1000-4-2 (ex 801-2) | [illegible]<br>Deel 2: [illegible] |
| IEC 1000-4-3 (ex 801-3) | [illegible]<br>Deel 3: [illegible] |
| IEC 1000-4-4 (ex 801-4) | [illegible]<br>Deel 4: [illegible] |
| EN 61010-1 | [illegible]<br>Deel 1: [illegible] |

## OVERENSSTEMMELSESERKLÆRING

[illegible]

## OVERENSSTEMMELSESERKLÆRING

[illegible]

## FÖRSÄKRAN OM ÖVERENSSTÄMMELSE

[illegible]

## VAATIMUSTENMUKAISUUSVAKUUTUS

[illegible]

## ΔΗΛΩΣΗ ΣΥΜΜΟΡΦΩΣΗΣ

[illegible]

## CONFORMITY CERTIFICATE

Varian S.p.A. declares under its own responsibility that the series [illegible] and [illegible] turbomolecular vacuum pump power supplies and relative accessories comply with the requirements of the electromagnetic compatibility Directive [illegible] and of the low voltage Directive [illegible]. It guarantees that the products listed above comply with the following standards:

| | |
|---|---|
| EN-CENELEC 55011 | Class A group 1 Limits and measuring methods for the radio frequency interference characteristics of industrial equipment |
| IEC 1000-4-2 (formerly 801-2) | Electromagnetic compatibility for industrial-process measurement<br>Part 2: Electromagnetic discharge requirements |
| IEC 1000-4-3 (formerly 801-3) | Electromagnetic compatibility for industrial-process measurement<br>Part 3: Radiated electromagnetic field requirements |
| IEC 1000-4-4 (formerly 801-4) | Electromagnetic compatibility for industrial-process measurement<br>Part 4: Electrical fast transient/burst requirements |
| EN 61010-1 | Safety requirements for electrical equipment for measurement, control and laboratory use<br>Part 1: general requirements |

Varian SpA
Via Varian 54, 10040 Leinì - Torino (Italy)

[illegible]

[illegible]

VARIAN

vacuum technologies

*Dear Customer,*

*Thank you for purchasing a VARIAN vacuum product. At VARIAN Vacuum Technologies we make every effort to ensure that you will be satisfied with the product and/or service you have purchased.*

*As part of our Continuous Improvement effort, we ask that you report to us any problem you may have had with the purchase or operation of our product. On the back side you find a Corrective Action Request form that you may fill out in the first part and return to us.*

*This form is intended to supplement normal lines of communications and to resolve problems that existing systems are not addressing in an adequate or timely manner.*

*Upon receipt of your Corrective Action Request we will determine the Root Cause of the problem and take the necessary actions to eliminate it. You will be contacted by one of our employees who will review the problem with you and update you, with the second part of the same form, on our actions.*

*Your business is very important to us. Please, take the time and let us know how we can improve.*

*Sincerely,*

*Sergio PIRAS*

*Vice President and General Manager*
*VARIAN Vacuum Technologies*

*Note: Fax or mail the Customer Request for Action (see backside page) to VARIAN Vacuum Technologies (Torino) - Quality Assurance or to your nearest VARIAN representative for onward transmission to the same address.*

## CUSTOMER REQUEST FOR CORRECTIVE / PREVENTIVE / IMPROVEMENT ACTION

TO: VARIAN VACUUM TECHNOLOGIES TORINO – QUALITY ASSURANCE

FAX N°: XXXX - 011 - 9979350

ADDRESS: VARIAN S.p.A. - Via F.lli Varian, 54 - 10040 Leinì (Torino) - Italy

E-MAIL: marco.marzio@varianinc.com

| NAME: | COMPANY: | FUNCTION: |
|---|---|---|

ADDRESS:

TEL. N°: _____ FAX N°: _____

E-MAIL: _____

PROBLEM / SUGGESTION:

REFERENCE INFORMATION (model n°, serial n°, ordering information, time to failure after installation, etc.):

DATE _____

CORRECTIVE ACTION PLAN /ACTUATION (by VARIAN VTT) LOG N° _____

XXXX – Code for dialing Italy from your country (es. 01139 from USA; 00139 from Japan, etc.)

VARIAN

## INFORMAZIONI GENERALI

Questa apparecchiatura è destinata ad uso professionale. L'utilizzatore deve leggere attentamente il presente manuale di istruzioni ed ogni altra informazione addizionale fornita dalla Varian prima dell'utilizzo dell'apparecchiatura. La Varian si ritiene sollevata da eventuali responsabilità dovute all'inosservanza totale o parziale delle istruzioni, ad uso improprio da parte di personale non addestrato, ad interventi non autorizzati o ad uso contrario alle normative nazionali specifiche. I controller della serie Turbo-V 300 ICE sono dei convertitori di frequenza, controllati da un microprocessore, realizzati con componenti a stato solido e con capacità di autodiagnostica e autoprotezione. I controller pilotano le pompe della serie Turbo-V 300 ICE (con un processo suddiviso in dieci passi) durante la fase di avvio controllando la tensione e la corrente in rapporto alla velocità raggiunta dalla pompa. Essi incorporano tutta la circuiteria necessaria per il funzionamento automatico delle pompe della serie Turbo-V 300 ICE. Tramite connettori ausiliari sono disponibili i comandi per l'avvio e l'arresto della pompa da remoto, i segnali che indicano lo stato operativo della pompa, i comandi per l'avvio e l'arresto della pompa di pre-vuoto, i segnali di bloccaggio (per interruttori a pressione, interruttori di controllo del flusso dell'acqua, ecc.), i segnali di controllo della fascia riscaldante (heater jacket), i segnali di controllo del flussimetro e quelli per la gestione della valvola di pulizia (purge valve). Nei paragrafi seguenti sono riportate tutte le informazioni necessarie a garantire la sicurezza dell'operatore durante L'utilizzo dell'apparecchiatura.
Informazioni dettagliate sono fornite nell'appendice "Technical Information".

**Questo manuale utilizza le seguenti convenzioni:**

**PERICOLO!**

I messaggi di pericolo attirano l'attenzione dell'operatore su una procedura o una pratica specifica che, se non eseguita in modo corretto, potrebbe provocare gravi lesioni personali.

**ATTENZIONE!**

I messaggi di attenzione sono visualizzati prima di procedure che, se non osservate, potrebbero causare danni all'apparecchiatura.

***NOTA***

*Le note contengono informazioni importanti estrapolate dal testo.*

## IMMAGAZZINAMENTO

Durante il trasporto e l'immagazzinamento dei controller devono essere soddisfatte le seguenti condizioni ambientali:

- temperatura: da -20 °C a +70 °C
- umidità relativa: 0 - 95% (senza condenza)

## PREPARAZIONE PER L'INSTALLAZIONE

Il controller viene fornito in un imballo protettivo speciale; se si presentano segni di danni, che potrebbero essersi verificati durante il trasporto, contattare l'ufficio vendite locale. Durante l'operazione di disimballaggio, prestare particolare attenzione a non lasciar cedere il controller e a non sottoporlo ad urti. Non disperdere l'imballo nell'ambiente. Il materiale è completamente riciclabile e risponde alla direttiva CEE 85/399 per la tutela dell'ambiente.

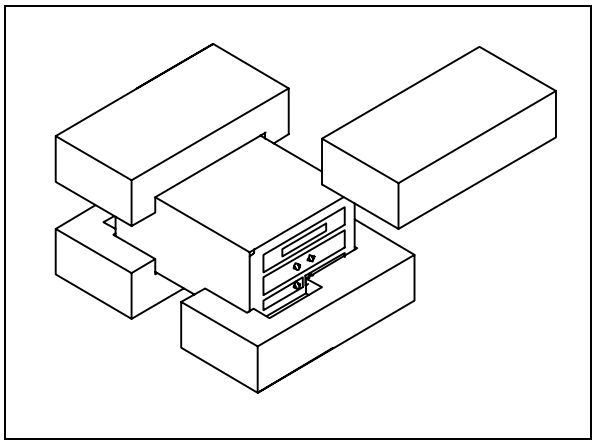

*Imballo dei controllers*

Ogni controller è fornito dalla Varian predisposto per una certa tensione di alimentazione:

- il modello 969-9433 per 220 Vac
- il modello 969-9533 per 120 Vac

Verificare che sia stata selezionata le tensione corretta e quindi ricollegare il cavo di alimentazione.

## INSTALLAZIONE

**PERICOLO!**

Il controller è fornito di un cavo di alimentazione a tre fili con una spina di tipo approvato a livello internazionale. Utilizzare sempre questo cavo di alimentazione ed inserire la spina in una presa con un adeguato collegamento di massa onde evitare scariche elettriche.
All'interno del controller si sviluppano alte tensioni che possono recare gravi danni o la morte. Prima di eseguire qualsiasi operazione di installazione o manutenzione del controller scollegarlo dalla presa di alimentazione.

***NOTA***

*Il controller può essere installato su di un tavolo o all'interno di un apposito rack. In ogni caso occorre che l'aria di raffreddamento possa circolare liberamente intorno all'apparato. Non installare né utilizzare il controller in ambienti esposti ad agenti atmosferici (pioggia, gelo, neve), polveri, gas aggressivi, in ambienti esplosivi o con elevato rischio di incendio.*

Durante il funzionamento è necessario che siano rispettate le seguenti condizioni ambientali:

- temperatura: da O °C a +40 °C;
- umidità relativa: 0 - 95% (non condensante).

Per il collegamento del controller con la relativa pompa utilizzare il cavo specifico del controller stesso.

Per gli altri collegamenti e l'installazione degli accessori opzionali, vedere la sezione "Technical Information".

## USO

In questo paragrafo sono riportate le principali procedure operative. Per ulteriori dettagli e per procedure che coinvolgono collegamenti o particolari opzionali, fare riferimento al paragrafo "Use" dell'appendice "Technical Information".
Prima di usare il controller effettuare tutti i collegamenti elettrici e pneumatici e fare riferimento al manuale della pompa collegata.

**PERICOLO!**

Per evitare danni alle persone ed all'apparato, nel caso in cui la pompa sia appoggiata su di un tavolo assicurarsi che sia stabile. Non fare funzionare mai la pompa se la flangia di ingresso non è collegata al sistema o non è chiusa con la flangia di chiusura.

***NOTA***

*Il connettore di richiusura J1 deve essere lasciato collegato con il suo ponticello se non viene effettuato alcun collegamento esterno. La pompa di pre-vuoto e la pompa Turbo-V possono essere accese contemporaneamente.*

### *Comandi, Indicatori e Connettori del Controller*

Di seguito sono illustrati il pannello di comando del Controller ed i pannelli di interconnessione. Per maggiori dettagli fare riferimento alla sezione "Technical Information".

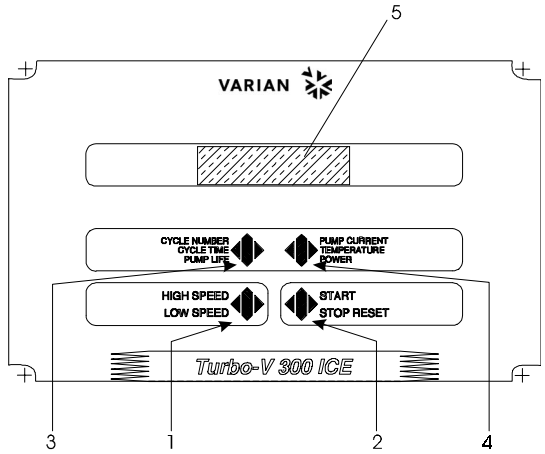


1. Pulsante per la selezione del modo HIGH/LOW SPEED. È attivo solo quando è selezionato il modo di comando dal pannello frontale. Premendolo ripetutamente, si passa ciclicamente da HIGH SPEED a LOW SPEED.
2. Pulsante per inviare i comandi di START, STOP o RESET. È attivo solo quando è selezionato il modo di comando dal pannello frontale. Premendolo una volta si attiva la fase di avvio; premendolo nuovamente si arresta la pompa. Se la pompa si è fermata automaticamente a causa di un guasto, occorre premere questo pulsante una prima volta per eseguire il reset del controller ed una seconda volta per riavviare la pompa.
3. Pulsante per richiamare sul display i parametri cycle number, cycle time e pump life.
4. Pulsante per richiamare sul display i parametri pump current, pump temperature, pump power, rotational speed, valore del flusso rilevato, tipo di gas e stato dell'allarme. È sempre attivo indipendentemente dal modo di funzionamento scelto. Premendo assieme i pulsanti 3 e 4 per almeno 2 secondi viene attivato un programma con il quale è possibile selezionare alcuni parametri operativi.
5. Display alfanumerico a cristalli liquidi: matrice di punti, 2 linee x 16 caratteri.

*Pannello frontale del Controller*
*969-9433 e 969-9533*

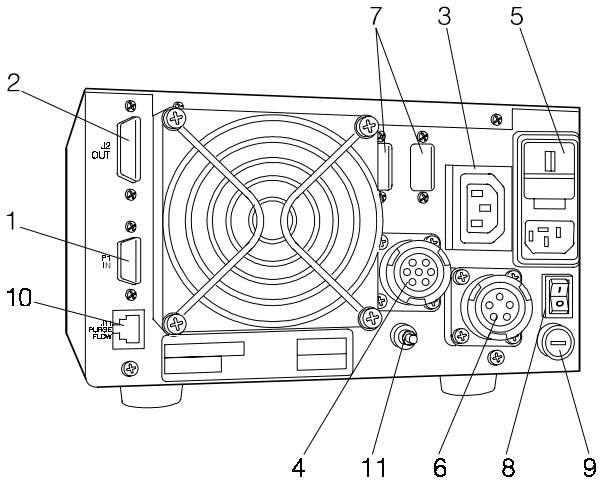


1. Connettore di ingresso dei segnali logici (il connettore di accoppiamento viene fornito con l'apposito ponticello di richiusura).
2. Connettore di uscita dei segnali logici e di verifica della corrente della pompa e della frequenza di eccitazione.
3. Presa di uscita di potenza (120 Vac, 1 A) per l'alimentazione dei dispositivi opzionali (vent device, relè di attivazione della pompa primaria, ecc.).
4. Connettore cavo pompa.
5. Modulo di ingresso dell'alimentazione per il Controller. Comprende il fusibile di protezione, il cambia tensione, la presa di alimentazione di potenza ed il filtro EMC.
6. Connettore per cavo di alimentazione heater jacket.
7. Vano previsto per il connettore della porta di comunicazione seriale RS-232 - RS-422 - RS-485 (fornita come opzione).
8. Interruttore di linea.
9. Fusibile su alimentazione heater jacket.
10. Connettore per cavo di collegamento al flussimetro (flow meter).
11. Collegamento di terra.

*Pannello posteriore dei controller 969-9433 e 969-9533*

## PROCEDURE DI USO

### *Accensione del Controller*

Per accendere il controller è sufficiente inserire il cavo di alimentazione nella presa di rete e portare l'interruttore di linea in posizione 1.

### *Avvio della Pompa*

Per avviare la pompa occorre premere il pulsante START del pannello frontale.

### *Arresto della Pompa*

Per arrestare la pompa occorre premere il pulsante STOP del pannello frontale.

## MANUTENZIONE

I controller della serie Turbo-V 300 ICE non richiedono alcuna manutenzione. Qualsiasi intervento deve essere eseguito da personale autorizzato.

In caso di guasto è possibile usufruire del servizio di riparazione Varian o del "Varian advanced exchange service", che permette di ottenere un controller rigenerato in sostituzione di quello guasto.

**PERICOLO!**

Prima di effettuare qualsiasi intervento sul controller scollegare il cavo di alimentazione.

Qualora un controller dovesse essere rottamato, procedere alla sua eliminazione nel rispetto delle normative nazionali specifiche.

## MESSAGGI DI ERRORE

In alcuni casi di guasto la circuiteria di autodiagnosi del controller presenta alcuni messaggi di errore elencati nella tabella riportata nella pagina seguente.

| MESSAGGIO | DESCRIZIONE | AZIONE CORRETTIVA |
|---|---|---|
| **CHECK CONNECTION TO PUMP** | Malfunzionamento nel collegamento tra pompa e controller | Verificare che il cavo di collegamento tra pompa e controller sia ben fissato da entrambe le estremità e non sia interrotto. Premere due volte il pulsante START per riavviare la pompa. |
| **PUMP WAITING INTERLOCK** | È attivo il segnale di interlock presente sul connettore P1 a causa dell'interruzione del corto circuito tra il pin 3 ed il pin 8 del connettore J1, o a causa dell'apertura del segnale di interlock esterno. | Ripristinare il corto circuito tra il pin 3 ed il pin 8 del connettore J1, o chiudere il segnale di interlock esterno |
| **FAULT: PUMP OVERTEMP.** | La temperatura del cuscinetto superiore della pompa ha superato i 60 °C. | Attendere che la temperatura ritorni al di sotto della soglia. Premere due volte il pulsante START per riavviare la pompa. |
| **FAULT: CONTROLLER OVERTEMPERATURE** | La temperatura del trasformatore del controller ha superato i 90 °C. | Attendere che la temperatura ritorni al di sotto della soglia. Premere due volte il pulsante START per riavviare la pompa. |
| **FAULT: TOO HIGH LOAD** | Durante il funzionamento normale la corrente assorbita dalla pompa è maggiore di quella programmata (3 A). | Verificare che il rotore della pompa abbia la possibilità di ruotare liberamente. Premere due volte il pulsante START per riavviare la pompa. |
| **FAULT: SHORT CIRCUIT** | Durante il funzionamento normale (dopo la fase di avvio) la connessione di uscita è in corto circuito (corrente di uscita maggiore di 6 A). | Verificare i collegamenti tra pompa e controller. Premere due volte il pulsante START per riavviare la pompa. |
| **OVERVOLTAGE** | Si è verificato un guasto nella sezione di alimentazione del controller, o il controller ha ricevuto un segnale spurio. | Premere due volte il pulsante START per riavviare la pompa. Se il messaggio si ripresenta rivolgersi alla Varian per la manutenzione. |
| **FLOW METER ALARM** | Allarme relativo al flusso di purge. Il valore del flusso è rimasto ad un valore inferiore alla soglia impostata, per un tempo maggiore o uguale a 10 secondi. | Controllare il corretto funzionamento del circuito di alimentazione del gas. |

## ALLGEMEINES

Dieser Apparat ist für Fachbetriebe bestimmt. Vor Gebrauch sollte der Benutzer dieses Handbuch sowie alle weiteren mitgelieferten Zusatzdokumentationen genau lesen. Bei Nichtbeachtung - auch teilweise - der enthaltenen Hinweise, unsachgemäßem Gebrauch durch ungeschultes Personal, nicht autorisierten Eingriffen und Mißachtung der einheimischen, hier zur Geltung kommenden Bestimmungen übernimmt die Firma Varian keinerlei Haftung. Die Controller der Serie Turbo-V 300 ICE sind mikroprozessorgesteuerte Frequenzwandler. Sie sind mit Festkörperbauteilen gefertigt und verfügen über ein Selbstdiagnose- und ein Selbstschutzsystem. Die Controller steuern die Pumpen der Serie Turbo-V 300 ICE (durch einen 10-Schritte-Prozeß) in der Startphase, indem sie die Spannung und die Stromstärke im Verhältnis zur Pumpengeschwindigkeit kontrollieren.
Sie enthalten alle für den automatischen Betrieb der Pumpenserie Turbo-V 300 ICE erforderlichen Schaltungen.Mittels Hilfsverbinder sind die Fernsteuerungen für Pumpenstart- und stopp, die Signale für die Anzeige des Pumpenzustands, die Start- und Stoppsteuerungen der Vorvakuumpumpen, sowie die Sperrsignale für Druckschalter, Wasserstrom-Kontrollschalter, Wärmeband, (heater jacket) die Kontrollsignale des Durchflußmessers, sowie die Kontrollsignale zur Überwachung der Reinigungsventile (purge valve) verfügbar. In den folgenden Abschnitten sind alle erforderlichen Informationen für die Sicherheit des Bedieners bei der Anwendung des Geräts aufgeführt. Detaillierte technische Informationen sind im Anhang "Technical Information" enthalten.

**In dieser Gebrauchsanleitung werden Sicherheitshinweise folgendermaßen hervorgehoben:**

**GEFAHR!**

Die Gefahrenhinweise lenken die Aufmerksamkeit des Bedieners auf eine bestimmte Prozedur oder Praktik, die bei unkorrekter Ausführung schwere Verletzungen hervorrufen können.

**ACHTUNG!**

Die Warnhinweise vor bestimmten Prozeduren machen den Bediener darauf aufmerksam, daß bei Nichteinhaltung Schäden an der Anlage entstehen können.

***ANMERKUNG***

*Die Anmerkungen enthalten wichtige Informationen, die aus dem Text hervorgehoben werden.*

## LAGERUNG

Beim Transport und bei der Lagerung der Controller müssen folgende klimatische Verhältnisse eingehalten werden:

- Temperatur: von -20 °C bis +70 °C
- Relative Luftfeuchtigkeit: 0-95 %
  (nicht kondensierend)

## VOR DER INSTALLATION

Der Controller wird mit einer speziellen Schutzverpackung geliefert. Eventuelle Transportschäden müssen der zuständigen örtlichen Verkaufsstelle gemeldet werden.
Beim Auspacken vorsichtig vorgehen, damit der Controller nicht fällt oder Stößen ausgesetzt wird.
Das Verpackungsmaterial muß korrekt entsorgt werden. Es ist vollständig recyclebar und entspricht der EG-Richtlinie 85/399 für Umweltschutz.

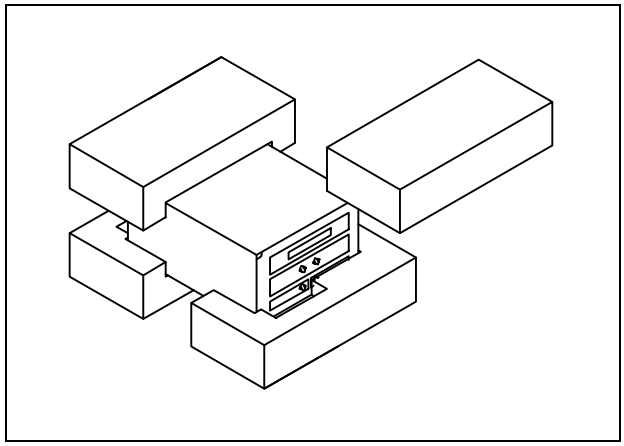

*Verpackung der Controller*

Alle Varian-Controller sind werkseitig für eine bestimmte Anschlußspannung ausgelegt:

- Modell 969-9433 für 220 VWs
- Modell 969-9533 für 120 VWs

Sicherstellen, daß die korrekte Spannung gewählt wurde, und das Netzkabel wieder anschließen.

## INSTALLATION

**GEFAHR!**

Der Controller wird mit einem Netzkabel geliefert, das 3 Drähte enthält und mit einem den internationalen Normen entsprechenden Stecker ausgerüstet ist. Es sollte immer dieses Netzkabel benutzt werden, das an eine korrekt geerdete Steckdose anzuschließen ist, um Stromentladungen zu vermeiden. Im Inneren des Controllers entstehen hohe Spannungen, die schwere Schäden verursachen und zum Teil lebensgefährlich sein können. Vor jedem Montage- bzw. Wartungseingriff muß deshalb der Netzstecker gezogen werden.

***ANMERKUNG***

*Der Controller kann auf einen Tisch oder ein Gestell montiert werden. In beiden Fällen muß auf die ungehinderte Zirkulation der Kühlluft im Bereich des Geräts geachtet werden. Der Controller darf nicht in Umgebungen installiert u/o benutzt werden, die Witterungseinflüssen (Regen, Frost, Schnee), Staub und aggressiven Gasen ausgesetzt sind und in denen Explosions- und erhöhte Brandgefahr besteht.*

Beim Betrieb müssen folgende Umgebungsbedingungen eingehalten werden:

- Temperatur: von 0 °C bis +40 °C
- Relative Luftfeuchtigkeit: 0 - 95 % (nicht kondensierend).

Für den Anschluß des Controllers an die Pumpe muß das zum Controller gehörende Kabel benutzt werden.

Für weitere Hinweise bezüglich Anschlüsse und Montage des bestellbaren Zubehörs siehe "Technical Information".

## GEBRAUCH

In diesem Kapitel sind die wichtigsten Betriebsvorgänge aufgeführt. Für weitere Hinweise bezüglich Anschlüsse und Montage des bestellbaren Zubehörs siehe Kapitel "Use" im Anhang zu "Technical Information". Vor Benutzung des Controllers sämtliche elektrischen und pneumatischen Anschlüsse ausführen, und die Betriebsanleitung der angeschlossenen Pumpe durchlesen.

**GEFAHR!**

Steht die Pumpe auf einem Tisch, muß auf den stabilen Stand geachtet werden, da sonst die Gefahr von Personen- und Geräteschäden besteht. Die Pumpe nie einschalten, wenn der Eingangsflansch nicht am System angeschlossen bzw. nicht mit dem Schließflansch abgedeckt ist.

***ANMERKUNG***

*Der Wiederverschließ-Verbinder J1 muß mit seiner Brücke angeschlossen bleiben, wenn kein externer Anschluß erfolgt. Die Vorvakuumpumpe und die Turbo-V-Pumpe können gleichzeitig eingeschaltet werden.*

### *Steuerungen, Anzeigen und Verbinder des Controllers*

Nachstehend werden die Steuertafel des Controllers sowie die Verbindungstafeln beschrieben. Für weitere Einzelheiten siehe "Technical Information".

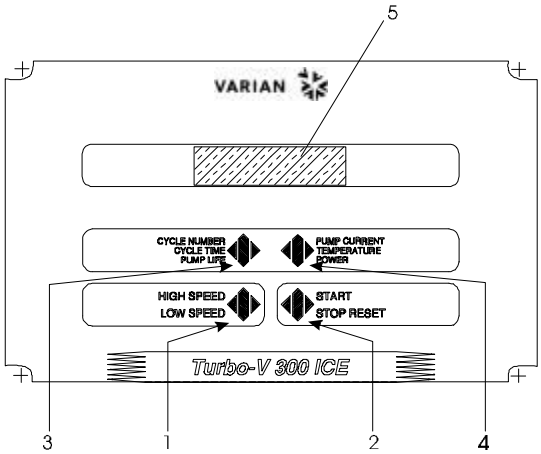


1. Taste für die Einstellung des Modus HIGH/LOW SPEED. Sie ist nur aktiv, wenn der Steuermodus auf Fronttafel eingestellt ist. Bei mehrmaligem Drücken geht man taktweise von HIGH SPEED auf LOW SPEED über.
2. START-, STOPP- oder RESET-Taste. Sie ist nur aktiv, wenn der Steuermodus auf der Fronttafel eingestellt ist. Bei einmaligem Drücken wird die Startphase aktiviert. Bei nochmaligem Drücken stoppt die Pumpe. Bei automatischem Pumpenstopp durch Störung muß diese Taste ein erstes Mal zur Controller-Rücksetzung und dann ein zweites Mal zum Neustarten der Pumpe gedrückt werden.
3. Taste für die Anzeige der Parameter "cycle number", "cycle time" und "pump life".
4. Taste für die Anzeige der Parameter "pump current", "pump temperature", "pump power" und "rational speed", den ermittelten Flußwert, Gasart und Alarmzustand. Sie ist immer aktiv, unabhängig vom gewählten Betriebsmodus. Bei gemeinsamer, mindestens 2 Sekunden langer Betätigung der Tasten 3 und 4 wird ein Programm aktiviert, mit dem einige Betriebsparamter programmiert werden können.
5. Alphanumerisches Flüssigkristall-Display: Punktmatrix, 2 Zeilen mit 16 Stellen.

*Fronttafel der Controller 969-9433 und 969-9533*

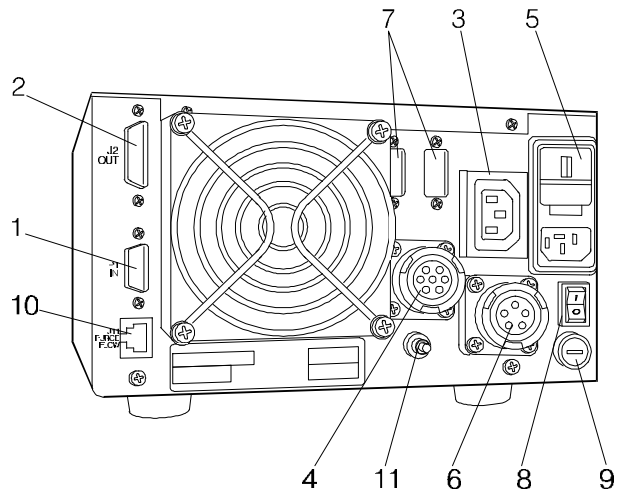


1. Eingangsverbinder der logischen Signale (der Kupplungsverbinder wird mit einer Wiederverschließbrücke geliefert).
2. Ausgangsverbinder der logischen und Pumpenstromkontrollsignale , sowie der Ansteuerfrequenzen.
3. Steckverbinder für Ausgangsleistung (120 Vac, 1 A) zur Versorgung der Optionsvorrichtungen (Lüfterrad, Relais zur Ansteuerung der Hauptpumpe, usw.).
4. Pumpenkabelverbindung.
5. Versorgungseingangsmodul für den Controller. Umfaßt die Schutzsicherung, den Spannungswandler, die Leistungsanschlußbuchse und den EMC-Filter.
6. Verbindung für Versorgungskabel “heater jacket”.
7. Platz für den Verbinder des seriellen Anschlusses RS-232 - RS-422 - RS485 (Option).
8. Hautptschalter.
9. Sicherung an Versorgungskabel “heater jacket.
10. Steckverbinder für Anschlußkabel zum Durchflußmesser (flow meter).
11. Erdungsanschluß.

*Rückseitige Tafel der Controller 969-9433 und 969-9533*

## BEDIENUNG

### *Einschalten des Controllers*

Zum Einschalten des Controllers genügt es, das Netzkabel an die Steckdose anzuschließen un den Leitungsschalter in Position 1 bringen.

### *Pumpenstart*

Zum Starten der Pumpe muß die Taste START an der Fronttafel gedrückt werden.

### *Pumpenstopp*

Zum Stoppen der Pumpe muß die STOPP-Taste an der Fronttafel gedrückt werden.

## WARTUNG

Die Controller der Serie Turbo-V 300 ICE sind wartungsfrei. Eventuell erforderliche Eingriffe müssen von dazu befugtem Fachpersonal ausgeführt werden.

Bei einem Defekt kann der Varian-Reparaturdienst bzw. der "Varian advanced exchange service" in Anspruch genommen werden, der für die Erneuerung defekter Controller sorgt.

---

**GEFAHR!**

Vor jedem Eingriff am Controller muß der Netzstecker gezogen werden.

---

Eine eventuelle Verschrottung muß unter Einhaltung der einschlägigen landesüblichen Vorschriften erfolgen.

## FEHLERMELDUNGEN

In einigen Störungsfällen zeigt das Selbstdiagnosessystem des Controllers die in der nachstehenden Tabelle zusammengefaßten Meldungen an.

| MELDUNG | BESCHREIBUNG | BEHEBUNG |
|---|---|---|
| **CHECK CONNECTION TO PUMP** | Fehlfunktion der Pumpen-Controller Verbindung. | Sicherstellen, daß das Verbindungskabel zwischen Pumpe und Controller an beiden Seiten korrekt befestigt ist und keine Unterbrechung vorliegt. Die Pumpe durch zweimalige Betätigung der START-Taste neustarten. |
| **PUMP WAITING INTERLOCK** | Das Interlock-Signal auf dem Verbinder P1 ist wegen der Kurzschlußunterbrechung zwischen Pin 3 und Pin 8 des Verbinders J1 oder wegen der Öffnung des externen Interlock-Signals aktiv. | Den Kurzschluß zwischen Pin 3 und Pin 8 des Verbinders J1 rücksetzen oder das externe Interlock-Signal schließen. |
| **FAULT: PUMP OVERTEMP.** | Die Temperatur des oberen Lagers bzw. der Pumpe hat 60 °C überschritten. | Warten bis die Temperatur unter den Schwellenwert gesunken ist.<br>Die Pumpe durch zweimalige Betätigung der START-Taste neustarten. |
| **FAULT: CONTROLLER OVERTEMPERATURE** | Die Temperatur des Controller-Trafos hat 90 °C überschritten. | Warten bis die Temperatur unter den Schwellenwert gesunken ist.<br>Die Pumpe durch zweimalige Betätigung der START-Taste neustarten. |
| **FAULT: TOO HIGH LOAD** | Während des Normalbetriebs (nach der Startphase) ist die Pumpen stromaufnahme größer als die vorgesehene (3 A). | Sicherstellen,, daß der Pumpenrotor ungehindert drehen kann.<br>Die Pumpe durch zweimalige Betätigung der START-Taste neustarten. |
| **FAULT: SHORT CIRCUIT** | Während des Normalbetriebs (nach der Startphase) erfolgt ein Kurzschluß der Ausgangsverbindung (Ausgangsstrom größer als 6 A). | Die Verbindung zwischen Pumpe und Controller prüfen.<br>Die Pumpe durch zweimalige Betätigung der START-Taste neustarten. |
| **OVERVOLTAGE** | Im Bereich der Kontrollerversorgung ist eine Störung aufgetreten oder der Kontroller hat ein unechtes Signal empfangen. | Die Taste START zweimal drücken, um die Pumpe wieder anzufahren.<br>Falls die Meldung nochmals auftritt, die Firma Varian zur Instandsetzung zu Rate ziehen. |
| **FLOW METER ALARM** | Alarm hinsichtlich Auswurffluß. Der Flußwert befindet sich für die Dauer von mehr als oder gleich 10 Sekunden auf einem Wert unterhalb der eingestellten Schwelle. | Einwandfreien Betrieb des Gasversorgungskreises überprüfen. |

## INDICATIONS GENERALES

Cet appareillage a été conçu en vue d'une utilisation professionnelle. Il est conseillé à l'utilisateur de lire attentivement cette notice d'instructions ainsi que toute autre indication supplémentaire fournie par Varian, avant d'utiliser l'appareil. Varian décline par conséquent toute responsabilité en cas d'inobservation totale ou partielle des instructions données, d'utilisation incorrecte de la part d'un personnel non formé, d'opérations non autorisées ou d'un emploi contraire aux réglementations nationales spécifiques.
Les contrôleurs de la série Turbo-V 300 ICE sont des convertisseurs de fréquence, contrôlés par un microprocesseur, réalisés avec des éléments à l'état solide et ayant des capacités d'autodiagnostic et d'autoprotection.
Les contrôleurs pilotent les pompes de la série Turbo-V 300 ICE (par un processus subdivisé en dix pas) lors de la phase de mise en marche, en contrôlant la tension et le courant par rapport à la vitesse atteinte par la pompe.
Ils incorporent l'ensemble de circuits nécessaire au fonctionnement automatique des pompes de la série Turbo-V 300 ICE.
Des connecteurs auxiliaires permetttent de disposer des commandes de mise en marche et d'arrêt de la pompe à distance, des signaux indiquant l'état opérationnel de la pompe, des commandes de mise en marche et d'arrêt de la pompe à pré-vide ainsi que de signaux de blocage (pour les interrupteurs à pression, les interrupteurs de contrôle du flux de l'eau, les signaux de commande de la bande chauffante (heater jacket), les signaux de commande du fluxmètre et ceux pour la commande de la soupape de purge (purge valve).
Les paragraphes suivants donnent toutes les indications nécessaires à garantir la sécurité de l'opérateur pendant l'utilisation de l'appareillage. Des renseignements plus détaillés se trouvent dans l'appendice "Technical Information".

**Cette notice utilise les signes conventionnels suivants:**

**DANGER!**

Les messages de danger attirent l'attention de l'opérateur sur une procédure ou une manoeuvre spéciale qui, si elle n'est pas effectuée correctement, risque de provoquer de graves lésions.

**ATTENTION**

Les message d'attention apparaissent avant certaines procédures qui, si elles ne sont pas observées, pourraient endommager sérieusement l'appareillage.

***NOTE***

*Les notes contiennent des renseignements importants, isolés du texte.*

## EMMAGASINAGE

Pendant le transport et l'emmagasinage des contrôleurs, il faudra veiller à respecter les conditions environnementales suivantes:

- température: de - 20 °C à + 70 °C
- humidité relative: de 0% à 95 % (non condensante).

## PREPARATION POUR L'INSTALLATION

Le contrôleur est fourni dans un emballage de protection spécial; si l'on constate des marques de dommages pouvant s'être produits pendant le transport, contacter aussitôt le bureau de vente local.
Pendant l'opération d'ouverture de l'emballage, veiller tout particulièrement à ne pas laisser tomber le contrôleur et à ne lui faire subir aucun choc.
Ne pas jeter l'emballage dans la nature. Le matériel est entièrement recyclable et il est conforme aux directives CEE 85/399 en matière de protection de l'environnement.

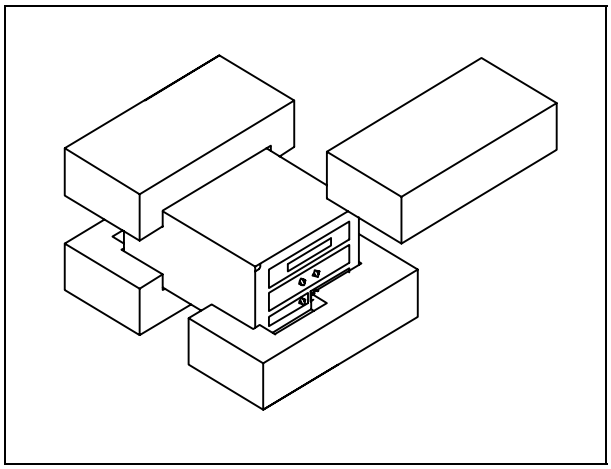

*Emballage des contrôleurs*

Chaque contrôleur est fourni par Varian pré-équipé pour une certaine tension d'alimentation:

- le modèle 969-9433 pour 220 Vca
- le modèle 969-9533 pour 120 Vca.

S'assurer que la tension correcte a été sélectionnée, puis reconnecter le câble d'alimentation.

## INSTALLATION

**DANGER!**

Les contrôleur est doté d'un câble d'alimentation à trois fils avec une fiche du type approuvé au niveau international. Utiliser toujours ce câble d'alimentation et introduire la fiche dans une prise pourvue d'un branchement approprié à la masse, afin d'éviter toute décharge électrique. A l'intérieur du contrôleur se développent de hautes tensions qui peuvent causer de graves dommages et même la mort. Avant d'effectuer toute opération d'installation ou d'entretien du contrôleur, le débrancher de la prise d'alimentation.

***NOTE***

*Le contrôleur peut être installé sur une table ou à l'intérieur d'un rack prévu à cet effet. Il est en tout cas nécessaire que l'air de refroidissement puisse circuler librement à l'intérieur de l'appareil. Ne pas installer et/ou utiliser le contrôleur dans des milieux exposés à des agents atmosphériques (pluie, gel, neige), à des poussières, à des gaz de combat ainsi que dans des milieux explosifs ou à risque élevé d'incendie.*

Pendant le fonctionnement, il est nécessaire de respecter les conditions environnementales suivantes:

- température: de 0 °C à + 40 °C
- humidité relative: de 0% à 95% (non condensante).

Pour la connexion du contrôleur à la pompe correspondante, utiliser le câble du contrôleur prévu à cet effet.

Pour les autres connexions et pour l'installation des accessoires en option, voir la section "Technical Information".

## UTILISATION

Dans ce paragraphe, on indique les principales procédures opérationnelles. Pour tous autres détails et pour les procédures concernant des connexions ou des éléments en option, se reporter au paragraphe "Use" de l'appendice "Technical Information". Avant d'utiliser le contrôleur, effectuer toutes les connexions électriques et pneumatiques et se référer à la notice de la pompe connectée.

**DANGER!**

Pour éviter tous dommages aux personnes et à l'appareil, si la pompe est placée sur une table, s'assurer que cette dernière est stable. Ne jamais faire fonctionner la pompe si la bride d'entrée n'est pas connectée au système ou si elle n'est pas fermée à l'aide de la bride de serrage.

***NOTE***

*Laisser le connecteur de réenclenchement J1 connecté à sa barrette s'il n'est procédé à aucune connexion extérieure. La pompe à pré-vide et la pompe Turbo-V peuvent être mises en marche simultanément.*

### *Commandes, Indicateurs et Connecteurs du Contrôleur*

On présente ci-dessous le tableau de commande du Contrôleur ainsi que les tableaux d'interconnexion.Pour de plus amples détails, se reporter à la section "Technical Information".

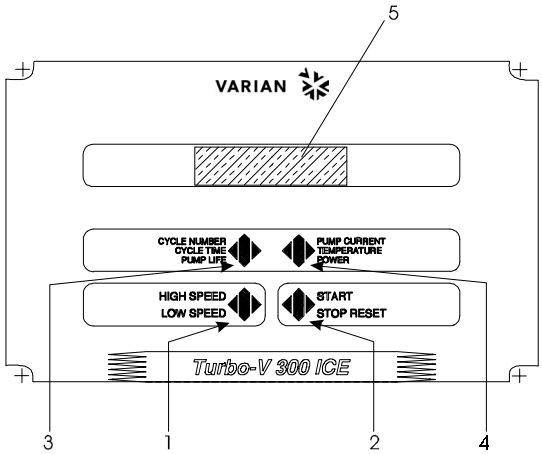


1. Bouton de sélection du mode HIGH/LOW SPEED. Il n'est actif que lorsque le mode de commande est sélectionné depuis le tableau frontal. La pression répétée de ce bouton permet de passer cycliquement de HIGH SPEED à LOW SPEED
2. Interrupteur envoyant les commandes de START, STOP ou RESET. Il n'est actif que lorsque le mode de commande est sélectionné depuis le tableau frontal. Une première pression de l'interrupteur active la phase de mise en marche; une deuxième pression provoque l'arrêt de la pompe. Si la pompe s'est arrêtée automatiquement à cause d'une panne, il faut presser cet interrupteur une première fois pour effectuer la mise à zéro du contrôleur et une deuxième fois pour remettre la pompe en marche.
3. Interrupteur rappelant sur l'afficheur les paramètres de cycle number, cycle time et pump life.
4. Bouton permettant de rappeler sur l'afficheur les paramètres de pump current, pump temperature, pump power et rotational speed, valeur du flux relevée, type de gaz et état de l'alarme. Il est toujour actif indépendemmant du type de mode de fonctionnement choisi. En pressant simultanément les boutons 3 et 4 pendant 2 secondes au moins, on active un programme avec lequel il est possible de sélectionner certains paramètres opérationnels.
5. Ecran alphanumérique à cristaux liquides: matrice de points, 2 lignes x 16 caractères.

*Tableau frontal des Contrôleurs 969-9433 et 969-9533*

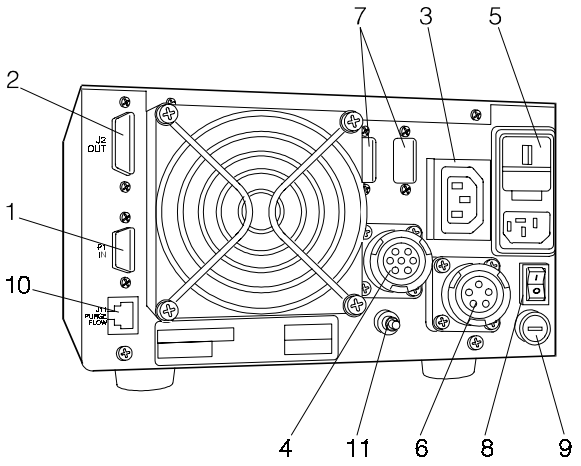


1. Connecteur d'entrée des signaux logiques (le connecteur d'enclenchement est doté de la barrette de réenclenchement spéciale).
2. Connecteur de sortie des signaux logiques et de vérification du courant de la pompe et de la fréquence d'excitation.
3. Prise de sortie de puissance (120 Vac, 1 A) pour l'alimentation des dispositifs optionnels (vent device, relais de déclenchement de la pompe primaire, etc.).
4. Connecteur pour le câble de la pompe.
5. Module d'entrée de l'alimentation pour le Contrôleur. Il comprend le fusible de protection, le survolteur- dévolteur, la prise d'alimentation de puissance et le filtre EMC.
6. Connecteur pour le câble d'alimentation du heater jacket.
7. Emplacement prévu pour le connecteur de la porte de communication série RS-232 - RS-422 - RS485 (fournie en option).
8. Interrupteur de ligne.
9. Fusible sur l'alimentation du heater jacket.
10. Connecteur pour le câble de connexion au fluxmètre (flow meter).
11. Connexion de mise à la terre.

*Tableau arrière des Contrôleurs 969-9433 et 969-9533*

## PROCEDURES D'UTILISATION

### *Allumage du Contrôleur*

Pour allumer le contrôleur, il suffit d'introduire le câble d'alimentation dans la prise du réseau et placer l'interrupteur sur la position 1.

### *Mise en marche de la Pompe*

Pour mettre la pompe en marche, presser l'interrupteur START du tableau frontal

### *Arrêt de la Pompe*

Pour arrêter la pompe, presser l'interrupteur STOP du tableau frontal

## ENTRETIEN

Les contrôleurs de la série Turbo-V 300 ICE n'exigent aucun entretien. Toute opération doit être effectuée par un personnel agréé.

En cas de panne, il est possible de s'adresser au Service de réparation Varian ou bien au "Varian advance exchange service" qui permet d'obtenir un contrôleur régénéré à la place du contrôleur détraqué.

**DANGER!**

Avant d'effectuer toute opération sur le contrôleur, débrancher le câble d'alimentation.

En cas de mise au rebut d'un contrôleur, procéder à son élimination conformément aux réglementations nationales en la matière.

## MESSAGES D'ERREUR

Dans certains cas de panne, l'ensemble de circuits d'autodiagnostic du contrôleur présente certains messages d'erreur indiqués dans le tableau ci-dessous.

| MESSAGE | DESCRIPTION | INTERVENTION |
|---|---|---|
| **CHECK CONNECTION TO PUMP** | Disfonctionnement de la connexion entre la pompe et le contrôleur. | S'assurer que le câble de connexion entre la pompe et le contrôleur et le contrôleur est bien fixé aux deux extrémités et qu'il n'est pas coupé. Presser deux fois l'interrupteur START pour réactiver la pompe. |
| **PUMP WAITING INTERLOCK** | Le signal d'interlock situé sur le connecteur P1 est actif à cause de la coupure du court-circuit entre le pin 3 et le pin 8 du connecteur J1 ou à cause de l'ouverture du signal d'interlock extérieur. | Rétablir le court-circuit entre le pin 3 et le pin 8 du connecteur J1 ou fermer le signal d'interlock extérieur. |
| **FAULT: PUMP OVERTEMP.** | La température du palier supérieur de la pompe a dépassé 60 °C. | Attendre que la température retourne au-dessous du seuil.<br>Presser deux fois l'interrupteur START pour remettre la pompe en marche. |
| **FAULT: CONTROLLER OVERTEMPERATURE** | La température du transformateur du contrôleur a dépassé 90 °C. | Attendre que la température retourne au-dessous du seuil.<br>Presser deux fois l'interrupteur START pour remettre la pompe en marche. |
| **FAULT: TOO HIGH LOAD** | Au cours du fonctionnement normal, le courant consommé par la pompe est plus grand que celui qui a été programmé (3 A). | S'assurer que le rotor de la pompe a la possibilité de tourner librement.<br>Presser deux fois l'interrupteur START pour remettre la pompe en marche. |
| **FAULT: SHORT CIRCUIT** | Au cour du fonctionnement normal (après la phase de mise en marche), la connexion de sortie est en court-circuit (courant de sortie plus grand que 6 A). | Vérifier les connexions entre la pompe et le contrôleur.<br>Presser deux fois l'interrupteur START pour remettre la pompe en marche. |
| **OVERVOLTAGE** | Un défaut s'est avéré dans la section d'alimentation du contrôleur, ou le contrôleur a reçu un faux signal. | Appyuer deux fois sur le bouton START pour faire redémarrer la pompe.<br>Si le message est réaffiché vous adresser à la société Varian pour l'entretien. |
| **FLOW METER ALARM** | Alarme concernant le flux de purge. La valeur du flux est restée au dessous du seuil défini pour une période supérieure ou égale à 10 secondes. | Vérifier le bon fonctionnement du circuit d'alimentation du gaz. |

## INFORMACIÓN GENERAL

Este equipo se ha concebido para un uso profesional. El usuario deberá leer atentamente el presente manual de instrucciones y cualquier otra información suplementaria facilitada por Varian antes de utilizar el equipo. Varian se considera libre de cualquier responsabilidad debida al incumplimiento total o parcial de las instrucciones, al uso poco apropiado por parte de personal sin formación, a las operaciones no autorizadas o al uso que no cumpla con las normas nacionales específicas.
Los controlers de la serie Turbo-V 300 ICE son convertidores de frecuencia, controlados por un microprocesador, realizados con componentes en estado sólido y con capacidad de autodiagnosis y autoprotección.
Los controlers pilotan las bombas de la serie Turbo-V 300 ICE (con un proceso dividido en diez pasos) durante la fase de puesta en marcha, controlando la tensión y la corriente en relación a la velocidad alcanzada por la bomba. Estos incorporan todos los circuitos de la serie Turbo-V 300 ICE.
Mediante conectores auxiliares están disponibles los mandos para la puesta en marcha y la parada de la bomba de remoto, las señales que indican el estado operativo de la bomba, los mandos para la puesta en marcha y la parada de la bomba de pre-vacío, las señales de bloqueo (para interruptores a presión, interruptores de control del caudal del agua, etc.), las señales de control de la faja de calefacción (heater jacket), las señales de control del indicador del flujo y las para la gestión de la válvula de limpieza (purge valve).
En los apartados siguientes se facilita toda la información necesaria para garantizar la seguridad del operador durante el uso del equipo. Una información más detallada se facilita en el Suplemento "Technical Information".

**Este manual utiliza los símbolos convencionales siguientes:**

**¡PELIGRO!**

Los mensajes de peligro atraen la atención del operador sobre un procedimiento o una operación específica que, al no realizarse correctamente, podría provocar graves lesiones personales.

**¡ATENCIÓN !**

Los mensajes de atención se visualizan antes de procedimientos que, al no respetarse, podrían provocar daños al equipo.

***NOTA***

*Las notas contienen información importante extraída del texto.*

## ALMACENAMIENTO

Durante el transporte y el almacenamiento de los controlers se deberá cumplir con las condiciones ambientales siguientes:
- temperatura: de -20 °C a +70 °C
- humedad relativa: 0 - 95% (no condensadora)

## PREPARACIÓN PARA LA INSTALACIÓN

El controler se suministra en un embalaje de protección especial; si se observan señales de daños, que podrían haberse producido durante el transporte, ponerse en contacto con la oficina de venta más cercana.
Durante la operación de desembalaje, prestar una atención especial a no dejar caer el controler y evitarle golpes.
No dispersar el embalaje en el medio ambiente. El material es totalmente reciclable y cumple con la directiva CEE 85/399 para la preservación del medio ambiente.

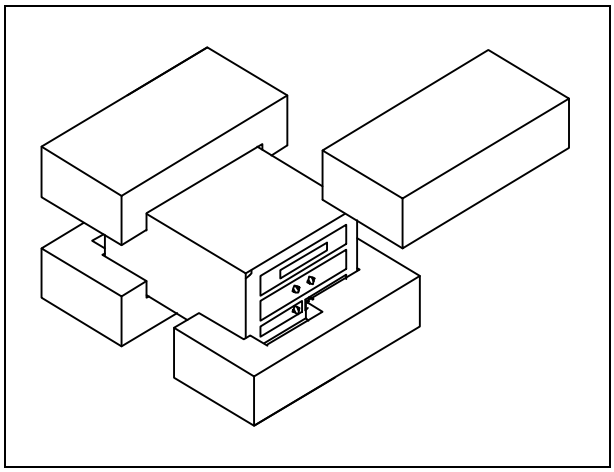

*Embalaje de los Controlers*

Cada controler llega de Varian preparado para una cierta tensión de alimentación:
- el modelo 969-9433 por 220 Vac
- el modelo 969-9533 por 120 Vac

Comprobar que se ha seleccionado la tensión correcta y luego volver a conectar el cable de alimentación.

## INSTALACIÓN

**¡PELIGRO!**

El controler va dotado de un cable de alimentación de tres hilos con una clavija de tipo aprobado a nivel internacional. Utilizar siempre este cable de alimentación e introducir la clavija en un enchufe con una conexión de masa adecuada para evitar descargas eléctricas.
Dentro del controler se desarrollan altas tensiones que pueden causar graves daños o la muerte. Antes de efectuar cualquier operación de instalación o mantenimiento del controler desconectarlo del enchufe de alimentación

***NOTA***

*El controler puede instalarse en una mesa o dentro de un rack específico. En cualquier caso, es necesario que el aire de refrigeración pueda circular libremente alrededor del aparato. No instalar y/o utilizar el controler en ambientes expuestos a agentes atmosféricos (lluvia, hielo y nieve), polvos, gases agresivos, en ambientes explosivos o con alto riesgo de incendio.*

Durante el funcionamiento es necesario que se respeten las condiciones ambientales siguientes:
- temperatura: de 0 ºC a + 40 ºC
- humedad relativa: 0 - 95% (no condensadora).

Para la conexión del controler con la bomba correspondiente utilizar el cable específico del controler.

Para otras conexiones y la instalación de los accesorios opcionales, véase la sección “Technical Information”.

## USO

En este apartado se citan los procedimientos operativos principales. Para más detalles y para procedimientos que impliquen conexiones u opcionales especiales, les remitimos al apartado “Use” del anexo “Technical Informations”.
Antes de usar el controler efectuar todas las conexiones eléctricas y neumáticas y consultar el manual de la bomba conectada

**¡PELIGRO!**

Para evitar lesiones a las personas y al aparato, si la bomba está apoyada sobre una mesa cerciorarse que es estable. No poner en marcha nunca la bomba si la brida de entrada no está conectada al sistema o no está cerrada con la brida de cierre.

***NOTA***

*El conector di cierre J1 ha de dejarse conectado con su conector puente si no se efectúa ninguna conexión exterior. La bomba pre-vacío y la bomba Turbo-V pueden encenderse simultáneamente.*

### *Mandos, Indicadores y Conectores del Controler*

A continuación se ilustran el panel de mando del controler y los paneles de interconexión.
Para más detalles consultar la sección “Technical Information”.

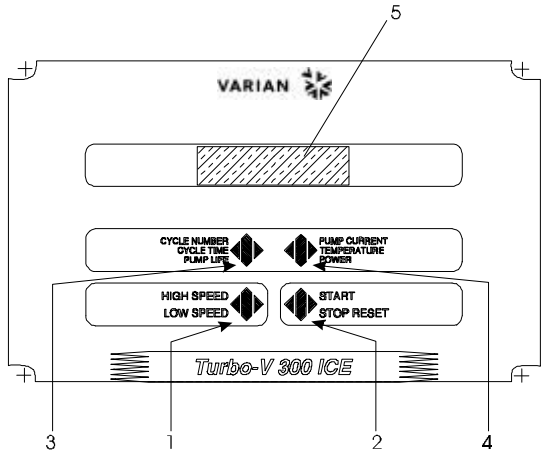


1. Pulsador para la selección del modo HIGH/LOW SPEED.. Está activado sólo cuando está seleccionado el modo de mando del panel frontal. Apretando el pulsador varias veces, se pasa ciclicamente de HIGH SPEED a LOW SPEED.
2. Pulsador para enviar los mandos de START, STOP o RESET. Está activo sólo cuando se selecciona el modo de mando del panel frontal. Apretándolo una vez se activa la fase de puesta en marcha; apretándolo otra vez se para la bomba. Si la bomba se ha parado automáticamente a causa de una avería, hay que apretar este pulsador primero una vez para efectuar el reset del controler y la segunda vez para volver a poner en marcha la bomba.
3. Pulsador para que aparezcan en el display los parámetros cycle number, cycle time y pump life.
4. Pulsador para que aparezcan en el display los parámetros pump current, pump temperature, pump power y rotational speed, valor del flujo tomado, tipo de gas y estado de la alarma. Está siempre activado independientemente del modo de funcionamiento elegido. Apretando juntos los pulsadores 3 y 4 durante 2 segundos por lo menos, se activa un programa con el cual se pueden seleccionar algunos parámetros operativos.
5. Display alfanumérico de cristales líquidos: matriz de puntos, 2 líneas x 16 caracteres.

*Panel frontal del controler*
*969-9433 y 969-9533*

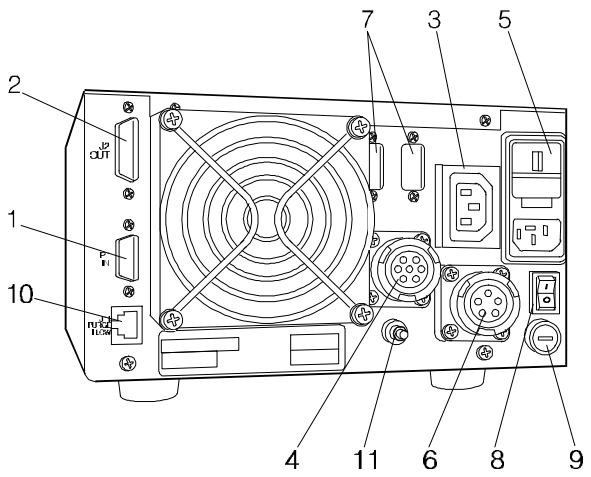


1. Conector de entrada de las señales lógicas (el conector de acoplamiento se suministra con el conector puente específico de cierre).
2. Conector de salida de las señales lógicas y de comprobación de la corriente de la bomba.
3. Toma de salida de potencia (120 Vac, 1 A) para la alimentación de los dispositivos opcionales (vent device, relè de activación de la bomba primaria, etc.).
4. Conector del cable de la bomba.
5. Módulo de entrada de la alimentación para el controler. Comprende el fusible de protección, el cambiador de tensión, la toma de alimentación de potencia y el filtro EMC.
6. Conector para el cable de alimentación del heater jacket.
7. Alojamiento previsto para el conector del puerto de comunicación serie RS-232 - RS-422 - RS-485 (suministrada como opción).
8. Interruptor de línea.
9. Fusible sobre alimentación del heater jacket.
10. Conector para cable de conexión al indicador del flujo (flow meter).
11. Conexión de tierra.

*Panel trasero del controler 969-9433 y 969-9533*

## PROCEDIMIENTOS DE USO

### *Encendido del controler*

Para encender el controler es suficiente introducir el cable de alimentación en la toma de red y colocar el interruptor de línea en posición 1.

### *Puesta en marcha de la Bomba*

Para poner en marcha la bomba hay que apretar el pulsador START del panel frontal.

### *Parada de la Bomba*

Para detener la bomba hay que apretar el pulsador STOP del panel frontal.

## MANTENIMIENTO

Los controlers de la serie Turbo-V 300 ICE no necesitan ningún mantenimiento. Cualquier operación ha de ser efectuada por personal autorizado.

En caso de avería es posible utilizar el servicio de reparación Varian o del “Varian advance exchange service”, que permite obtener un controler regenerado en vez del averiado.

**¡PELIGRO!**

Antes de efectuar cualquier operación en el controler desenchufar el cable de alimentación.

En caso de que un controler se tenga que desguazar, efectuar su eliminación respetando las normas nacionales específicas.

## MENSAJES DE ERROR

En algunos casos de avería los circuitos de autodiagnosis del controler presenta algunos mensajes de error detallados en la tabla siguiente.

| MENSAJE | DESCRIPCIÓN | ACCIÓN CORRECTIVA |
|---|---|---|
| **CHECK CONNECTION TO PUMP** | Mal funcionamiento en la conexión entre la bomba y el Controler. | Comprobar que el cable de conexión entra en la bomba y el controler está bien fijado por ambos extremos y no está interrumpido.<br>Apretar dos veces el pulsador START para volver a poner en marcha la bomba. |
| **PUMP WAITING INTERLOCK** | Está activa la señal de interlock presente en el conector P1 a causa de la interrupción del cortocircuito entre el pin 3 y el pin 8 del conector J1, o a causa de la apertura de la señal de interlock externo. | Eliminar el cortocircuito entre el pin 3 y el pin 8 del conector J1, o cerrar la señal de interlock exterior. |
| **FAULT: PUMP OVERTEMP.** | La temperatura del rodamiento superiorde la bomba ha superado los 60 ºC. | Esperar a que la temperatura vuelva por debajo del umbral.<br>Apretar dos veces el pulsador START para volver a poner en marcha la bomba. |
| **FAULT: CONTROLLER OVERTEMPERATURE** | La temperatura del transformador del controler ha superado los 90 ºC. | Esperar a que la temperatura vuelva por debajo del umbral.<br>Apretar dos veces el pulsador START para volver a poner en marcha la bomba. |
| **FAULT: TOO HIGH LOAD** | Durante el funcionamiento normal (tras la fase de puesta en marcha) la corriente absorbida por la bomba es superior a la programada (3 A). | Comprobar que el rotor de la bomba tiene la posibilidad de girar libremente. Apretar dos veces el pulsador START para volver a poner en marcha la bomba. |
| **FAULT: SHORT CIRCUIT** | Durante el funcionamiento normal (tras la fase de puesta en marcha) la conexión de salida está en cortocircuito (corriente de salida más 6 A). | Comprobar las conexiones entre la bomba y el controler. Apretar dos veces el pulsador START para volver a poner en marcha la bomba. |
| **OVERVOLTAGE** | Ha occurrido una avería en la sección de alimentación del controler, o el controler recibió una señal espuria. | Apretar dos veces el pulsador START para volver a poner en marcha la bomba.<br>En caso el mensaje vuelva a aparecer, llamar a Varian para la manutención. |
| **FLOW METER ALARM** | Alarma concerniente al flujo de limpieza (purge). El valor del flujo se ha quedado a un valor inferior del limen impostado durante un tiempo mayor o igual de 10 segundos. | Controlar el correcto funcionamiento del circuito de alimentación del gas, |

## INFORMAÇÕES GERAIS

Esta aparelhagem destina-se ao uso profissional. O utilizador deve ler atentamente o presente manual de instruções e todas as informações adicionais fornecidas pela Varian antes de utilizar a aparelhagem. A Varian não se responsabiliza pela inobservância total ou parcial das instruções, pelo uso indevido por parte de pessoas não treinadas, por operações não autorizadas ou pelo uso contrário às normas nacionais específicas.
Os controllers da série Turbo-V 300 ICE são conversores de frequência, controlados por um microprocessador, realizados com componentes em estado sólido e com capacidade de autodiagnóstico e autoprotecção.
Os controllers comandam as bombas da série Turbo-V 300 ICE (com um processo subdividido em dez passos) durante a fase de activação, controlando a tensão e a corrente em relação à velocidade atingida pela bomba.
Incorporam todos os circuitos necessários para o funcionamento automático das bombas da série Turbo-V 300 ICE.
Através de conectores auxiliares, estão disponíveis os comandos para a activação e a paragem da bomba por controlo remoto, os sinais que indicam o estado operativo da bomba, os comandos para a activação e a paragem da bomba de pré-vácuo, os sinais de bloqueio (para interruptores de pressão, interruptores de controlo do fluxo de água, etc.), os sinais de controlo da cinta aquecedora (heater jacket), os sinais de controlo do fluxímetro e os para a activação da válvula de descarga (purge valve). Nos parágrafos seguintes estão descritas todas as informações necessárias para garantir a segurança do operador durante o uso da aparelhagem. Informações pormenorizadas são fornecidas no apêndice "Technical Information".

**Este manual utiliza as seguintes convenções:**

**PERIGO!**

As mensagens de perigo chamam a atenção do operador para um procedimento ou uma prática específica que, se não efectuada correctamente, pode provocar graves lesões pessoais.

**ATENÇÃO !**

As mensagens de atenção são visualizadas antes de procedimentos que, se não observados, podem causar danos à aparelhagem.

***NOTA***

*As notas contêm informações importantes destacadas do texto.*

## ARMAZENAGEM

Durante o transporte e a armazenagem dos controllers, devem ser satisfeitas as seguintes condições ambientais:

- temperatura: de -20 ºC a + 70 ºC
- humidade relativa: 0 - 95% (não condensante)

## PREPARAÇÃO PARA A INSTALAÇÃO

O controller é fornecido numa embalagem protectora especial; se apresentar sinais de danos, que poderiam verificar-se durante o transporte, entrar em contacto com o escritório de vendas local.
Durante a retirada da embalagem, tomar muito cuidado para não deixar cair o controller e para não submetê-lo a choques.
Não depositar a embalagem no meio ambiente. O material é completamente reciclável e responde à directriz CEE 85/399 para a protecção do meio ambiente.

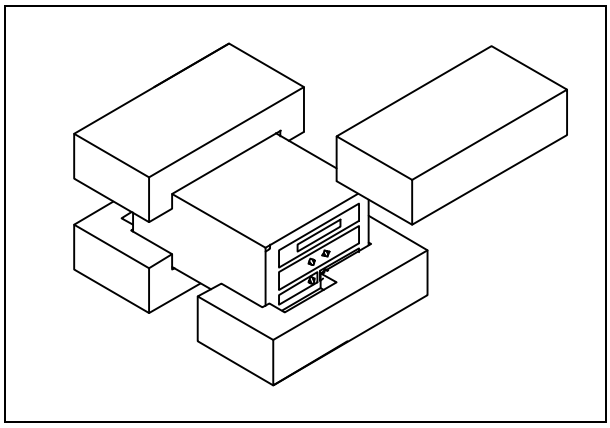

*Embalagem dos controllers*

Cada controller chega à Varian predisposto para uma determinada tensão de alimentação:

- o modelo 969-9433 para 220 Vac
- o modelo 969-9533 para 120 Vac

Verificar se foi seleccionada a tensão correcta e, a seguir, ligar novamente o cabo de alimentação.

## INSTALAÇÃO

**PERIGO!**

O controller é fornecido com um cabo de alimentação de três fios com uma tomada de tipo aprovado a nível internacional. Utilizar sempre este cabo de alimentação e ligar a tomada à rede com uma ligação de massa adequada, para evitar descargas eléctricas. No interior do controller desen volvem-se altas tensões que podem provocar graves danos ou a morte. Antes de efectuar qualquer operação de instalação ou manutenção do controller, desligar a tomada de alimentação.

***NOTA***

*O controller pode ser instalado numa mesa ou no interior de um rack específico. Em todo caso, é necessário que o ar de refrigeração possa circular livremente ao redor da aparelhagem. Não instalar e/ou utilizar o controller em ambientes expostos a agentes atmosféricos (chuva, gelo, neve), poeiras, gases agressivos ou em ambientes com perigo de explosão ou com elevado risco de incêndio.*

Durante o funcionamento é necessário que sejam respeitadas as seguintes condições ambientais:

- temperatura: de 0 ºC a + 40 ºC
- humidade relativa: 0 - 95% (não condensante).

Para a ligação do controller à respectiva bomba, utilizar o cabo específico do próprio controller.

Para as outras ligações e a instalação dos acessórios opcionais, ver a secção "Technical Information".

## UTILIZAÇÃO

Neste parágrafo são descritos os principais procedimentos operativos. Para maiores detalhes e para procedimentos que envolvem ligações ou peças opcionais, consultar o parágrafo "Use" do apêndice "Technical Information". Antes de usar o controller, efectuar todas as ligações eléctricas e pneumáticas e consultar o manual da bomba ligada.

**PERIGO!**

Para evitar danos às pessoas e à aparelhagem, caso a bomba esteja apoiada numa mesa, certificar-se que esteja estável. Nunca activar a bomba se o flange de entrada não estiver ligado ao sistema ou não estiver fechado com o flange de fecho.

***NOTA***

*O conector de fecho J1 deve permanecer ligado à sua ponte se não é efectuada nenhuma ligação externa. A bomba de pré-vácuo e a bomba Turbo-V podem ser ligadas simultaneamente.*

### *Comandos, Indicadores e Conectores do Controller*

A seguir, estão ilustrados o painel de comando do Controller e os painéis de interconexão. Para maiores detalhes, consultar a secção "Technical Information".

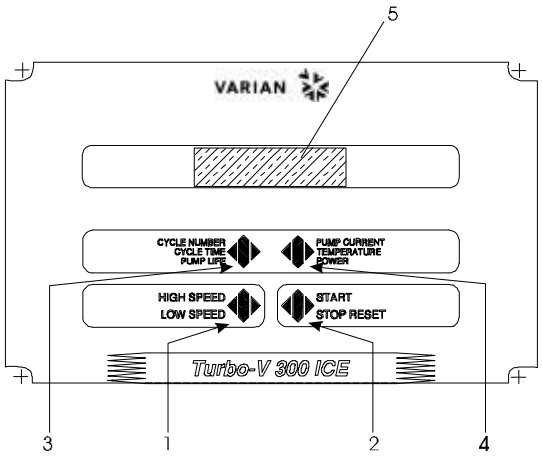


1. Botão para a selecção do modo HIGH/LOW SPEED. Está activo só quando é seleccionado o modo de comando pelo painel frontal. Premendo-o repetidamente, passa-se ciclicamente de HIGH SPEED para LOW SPEED.
2. Botão para enviar os comandos de START, STOP ou RESET. Está activo só quando é seleccionado o modo de comando pelo painel frontal. Premendo-o uma vez activa-se a fase de accionamento; premendo-o novamente a bomba pára. Se a bomba parou automaticamente devido a um defeito, é necessário premer este botão uma vez para executar o reset do controller e uma segunda vez para reactivar a bomba.
3. Botão para visualizar no mostrador os parâmetros de cycle number, cycle time e pump life.
4. Botão para visualizar no mostrador os parâmetros de pump current, pump temperature, pump power, rotational speed, valor do fluxo detectado, tipo de gás e estado de alarme . Está sempre activo, independentemente do modo de funcionamento escolhido. Premendo ao mesmo tempo os botões 3 e 4 por, no mínimo, 2 segundos, é activado um programa com o qual é possível programar alguns parâmetros operativos.
5. Mostrador alfanumérico a cristais líquidos: matriz por pontos, 2 linhas x 16 caracteres.

*Painel frontal do Controller*
*969-9433 e 969-9533*

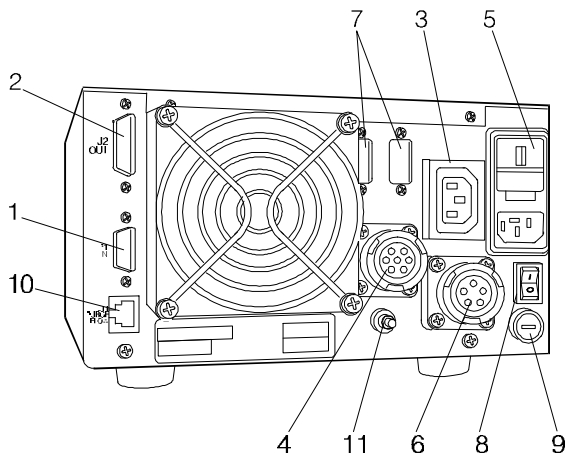


1. Conector de entrada dos sinais lógicos (o conector de acoplamento é fornecido com ponte específica de fecho).
2. Conector de saída dos sinais lógicos e de verificação da corrente da bomba.
3. Tomada de saída de potência (120 Vac, 1 A) para a alimentação dos dispositivos opcionais (vent device, relê de activação da bomba primária etc.).
4. Conector do cabo da bomba.
5. Módulo de entrada da alimentação para o Controller. Compreende o fusível de protecção, o transformador de tensão, a tomada de alimentação de potência e o filtro EMC.
6. Conector para cabo de alimentação do heater jacket.
7. Vão previsto para o conector da porta de comunicação serial RS-232 - RS-422 - RS-485.
8. Interruptor de linha.
9. Fusível na alimentação do heater jacket.
10. Conector para cabo de ligação ao fluxímetro (flow meter).
11. Ligação à terra.

*Painel posterior dos Controllers 969-9433 e 969-9533*

## PROCEDIMENTOS DE USO

### *Acendimento do Controller*

Para ligar o controller, é suficiente inserir o cabo de alimentação na tomada de rede e coloque ó interruptor de linha em posição 1.

### *Activação da bomba*

Para activar a bomba, é necessário premer o botão START do painel frontal.

### *Paragem da bomba*

Para parar a bomba, é necessário premer o botão STOP do painel frontal.

## MANUTENÇÃO

Os controllers da série Turbo-V 300 ICE não requerem qualquer manutenção. Todas as operações devem ser efectuadas por pessoal autorizado.

Em caso de defeito é possível utilizar o serviço de reparação Varian ou o "Varian advanced exchange service", que permite obter um controller regenerado que substitua o controller com defeito.

**PERIGO!**

As Antes de efectuar qualquer operação no controller, desligar o cabo de alimentação.

Caso um controller deva ser destruído, proceder à sua eliminação respeitando as normas nacionais específicas.

## MENSAGENS DE ERRO

Em alguns casos de defeitos, os circuitos de autodiagnóstico do controller apresentam mensagens de erro relacionadas na tabela abaixo.

| MENSAGEM | DESCRIÇÃO | ACÇÃO CORRECTIVA |
|---|---|---|
| **CHECK CONNECTION TO PUMP** | Mau funcionamento na ligação entre a bomba e o controller. | Verificar se o cabo de ligação entre a bomba e o controller está bem fixado em ambas as extremidades e não está interrompido.<br>Premer duas vezes o botão START para reactivar a bomba. |
| **PUMP WAITING INTERLOCK** | É activado o sinal de interlock existente no conector P1 devido à interrupção do curto circuito entre o pin 3 e o pin 8 do conector J1 ou devido à abertura do sinal de interlock externo. | Restabelecer o curto circuito entre o pin 3 e o pin 8 do conector J1 ou fechar o sinal de interlock externo. |
| **FAULT: PUMP OVERTEMP.** | A temperatura do rolamento superior da bomba superou os 60 ºC. | Aguardar até que a temperatura regresse dentro do limite estabelecido.<br>Premer duas vezes o botão START para reactivar a bomba. |
| **FAULT: CONTROLLER OVERTEMPERATURE** | A temperatura do transformador do controller superou os 90 ºC. | Aguardar até que a temperatura volte ao limite estabelecido.<br>Premer duas vezes o botão START para reactivar a bomba. |
| **FAULT: TOO HIGH LOAD** | Durante o funcionamento normal a corrente absorvida pela bomba é maior do que a programada (3 A). | Verificar se o rotor da bomba pode rodar livremente.<br>Premer duas vezes o botão START para reactivar a bomba. |
| **FAULT: SHORT CIRCUIT** | Durante o funcionamento normal (após a fase de accionamento) a conexão de saída está em curto circuito (corrente de saída maior que 6 A). | Verificar as ligações entre a bomba e o controller.<br>Premer duas vezes o botão START para reactivar a bomba. |
| **OVERVOLTAGE** | Verificou-se um defeito na secção de alimentação do controller, ou o controller recebeu um sinal falso | Premer duas vezes o botão START para reactivar a bomba.<br>Se a mensagem se reapresenta, dirigir-se à Varian para a manutenção. |
| **FLOW METER ALARM** | Alarme relativo ao fluxo de descarga. O valor do fluxo permaneceu num valor inferior ao limite estabelecido, durante um tempo maior ou igual a 10 segundos. | Verificar se o circuito de alimentação do gás funciona correctamente. |

## ALGEMENE INFORMATIE

Deze apparatuur is bestemd voor beroepsmatig gebruik. De gebruiker wordt verzocht aandachtig deze handleiding en alle overige door Varian verstrekte informatie door te lezen alvorens het apparaat in gebruik te nemen. Varian acht zich niet aansprakelijk voor de gevolgen van het niet of gedeeltelijk in acht nemen van de aanwijzingen, onoordeelkundig gebruik door niet hiervoor opgeleid personeel, reparaties waarvoor geen toestemming is verkregen of gebruik in strijd met de specifieke nationale wetgeving. De controllers van de Turbo-V 300 ICE serie zijn frequentieomzetters die gestuurd worden door een microprocessor, zijn gemaakt van halfgeleiderelementen en zijn in staat om zelfdiagnose en zelfbescherming uit te voeren. De controllers sturen de pompen van de serie Turbo-V 300 ICE (met een proces bestaande uit tien stappen) tijdens de startfase, en controleren hierbij de spanning en de stroom in verhouding tot de door de pomp bereikte snelheid. De controllers zijn van circuits voorzien die noodzakelijk zijn voor de automatische werking van de pompen van de serie Turbo-V 300 ICE. Via hulpconnectoren zijn de sturingen voor het op afstand starten en stoppen van de pomp beschikbaar, de signalen die de bedrijfstoestand van de pomp aangeven, de sturingen voor het starten en stoppen van de pre-vacuümpomp, blokkeersignalen (voor drukschakelaars, regelschakelaars van de waterstroom, enz.), stuursignalen van de verhittingsmantel (heater jacket), stuursignalen van de stromingsmeter en regelsignalen van de reinigingsklep (purge valve). In de volgende paragrafen is alle informatie vermeld om de veiligheid van de operator tijdens het gebruik van de apparatuur te verzekeren. Gedetailleerde informatie is te vinden in de bijlage "Technical information".

**Deze handleiding hanteert de volgende symbolen:**

**GEVAAR!**

Bij dit symbool staat tekst die de aandacht van de operator vestigt op een speciale procedure of methode die, indien niet correct uitgevoerd, ernstig lichamelijk letsel kan veroorzaken.

**ATTENTIE**

Bij dit symbool staat tekst met procedures die, indien niet opgevolgd, schade aan apparatuur kunnen veroorzaken.

***OPMERKING***

*De opmerkingen bevatten belangrijke informatie die uit de tekst is gelicht.*

## OPSLAG

Tijdens het transport en de opslag van de controllers moeten de volgende omgevingscondities aanwezig zijn:

- temperatuur: van -20 °C tot +70 °C
- relatieve vochtigheid: 0 - 95% (niet condenserend)

## VOORBEREIDING VOOR INSTALLATIE

De controller wordt in een speciale beschermende verpakking geleverd; als er schade wordt geconstateerd die tijdens het transport veroorzaakt zou kunnen zijn, meteen contact opnemen met het plaatselijke verkoopkantoor.
Zorg er bij het uitpakken voor dat de controller niet kan vallen of stoten te verduren krijgt.
Laat de verpakking niet ergens buiten achter. Het verpakkingsmateriaal is volledig recyclebaar en voldoet aan de EEG milieurichtlijn 85/399.

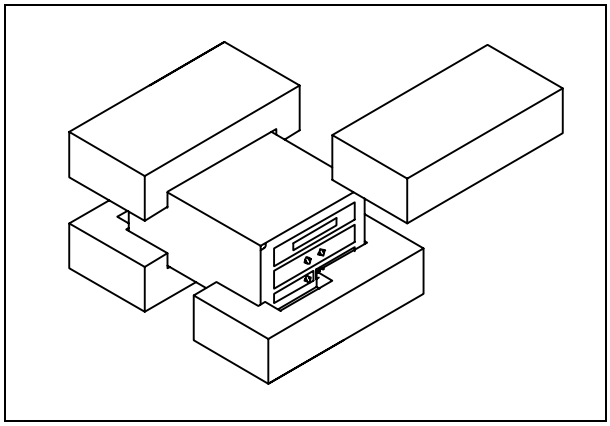

*Verpakking van de controllers*

Varian heeft elke controller voorbereid voor een bepaalde voedingsspanning:

- het model 969-9433 voor 220 Vac
- het model 969-9533 voor 120 Vac

Controleer of de juiste spanning is gekozen en sluit de voedingskabel weer aan.

## INSTALLATIE

**GEVAAR!**

De controller is voorzien van een voedingskabel met drie draden en een stekker van het internationaal goedgekeurde type. Gebruik altijd deze voedingskabel en steek de stekker in een geaard contactstop om elektrische ontladingen te voorkomen. In de controller ontwikkelen zich hoge spanningen die zware beschadigingen of de dood kunnen veroorzaken. Alvorens installatie- of onderhouds-werkzaamheden uit te voeren, de controller van de contactstop afkoppelen.

***OPMERKING***

*De controller kan op een tafel of in een speciaal rack worden geïnstalleerd. In ieder geval moet de koellucht vrij rondom het apparaat kunnen circuleren.*
*De controller mag niet geïnstalleerd en/of gebruikt worden in ruimten die blootgesteld zijn aan de weersomstandigheden (regen, vorst, sneeuw), stof, agressieve gassen, of in ruimten met explosiegevaar of zeer hoog brandgevaar.*

Tijdens de werking moeten de volgende omgevingscondities aanwezig zijn:

- temperatuur: van 0 °C tot +40 °C
- relatieve vochtigheid: 0 - 95% (niet condenserend).

Gebruik voor aansluiting van de controller op de pomp de speciale kabel van de controller.

Voor de overige aansluitingen en de installatie van de accessoires wordt verwezen naar het hoofdstuk "Technical Information".

## GEBRUIK

In deze paragraaf worden de voornaamste bedieningswijzen uitgelegd. Voor meer informatie of procedures die aansluitingen of speciale opties betreffen wordt verwezen naar de paragraaf "Use" van de bijlage "Technical Informations". Breng, alvorens de controller in gebruik te nemen, alle elektrische en pneumatische aansluitingen tot stand en raadpleeg hiervoor de handleiding van de aan te sluiten pomp.

**GEVAAR!**

Indien de pomp op een tafel is geplaatst, controleren of deze stabiel staat om letsel aan personen en schade aan het apparaat te voorkomen. Laat de pomp nooit werken zonder dat de ingangsflens aan het systeem is gekoppeld of de afsluitflens is gesloten.

***OPMERKING***

*De connector J1 moet met zijn jumper aangesloten blijven als geen externe aansluiting tot stand wordt gebracht. De pre-vacuümpomp en de Turbo-V pomp mogen beide gelijktijdig ingeschakeld zijn.*

### *Bedieningsorganen, Controlelampjes en Connectoren van de Controller*

Hier volgt de beschrijving van het bedieningspaneel van de controller en van de doorverbindingspanelen. Voor meer informatie wordt verwezen naar het hoofdstuk "Technical Information".

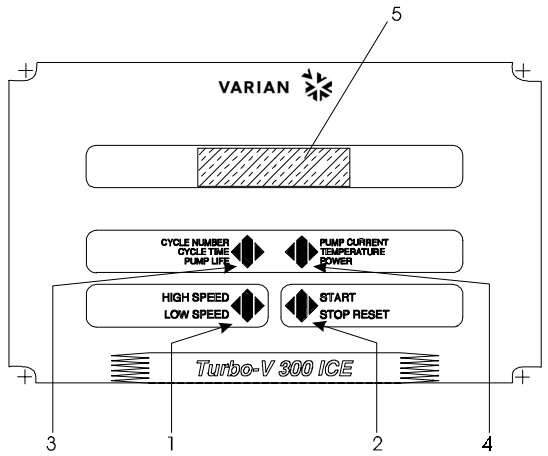


1. Drukknop voor selectie van de bedrijfswijze HIGH/LOW SPEED. Is alleen actief wanneer de bedrijfswijze op het frontpaneel wordt geselecteerd. Door de knop herhaaldelijk in te drukken, gaat de pomp cyclisch van HIGH SPEED naar LOW SPEED over.
2. Drukknop voor het zenden van de sturingen START, STOP of REST. Is alleen actief wanneer de bedrijfswijze op het frontpaneel wordt geselecteerd. Door de knop een maal in te drukken wordt de startfase geactiveerd; door de knop opnieuw te bedienen wordt de pomp gestopt. Als de pomp automatisch is gestopt ten gevolge van een storing, moet deze knop een eerste maal worden bediend om de controller te resetten en een tweede maal om de pomp weer op te starten.
3. Drukknop voor weergave op het display van de parameters cycle number, cycle time en pump life.
4. Drukknop voor weergave op het display van de parameters pump current, pump temperature, pump power, rotational speed, gemeten stromingswaarde, type gas en alarmstatus. Is altijd actief, onafhankelijk van de gekozen bedrijfswijze. Door drukknoppen 3 en 4 gelijktijdig gedurende ten minste 2 seconden in te drukken, wordt een programma gestart waarmee enkele bedrijfsparameters kunnen worden geprogrammeerd.
5. Alfanumeriek display met vloeibare kristallen (LCD): puntjespatroon, 2 lijnen x 16 karakters.

*Frontpaneel van de controllers*
*969-9433 en 969-9533*

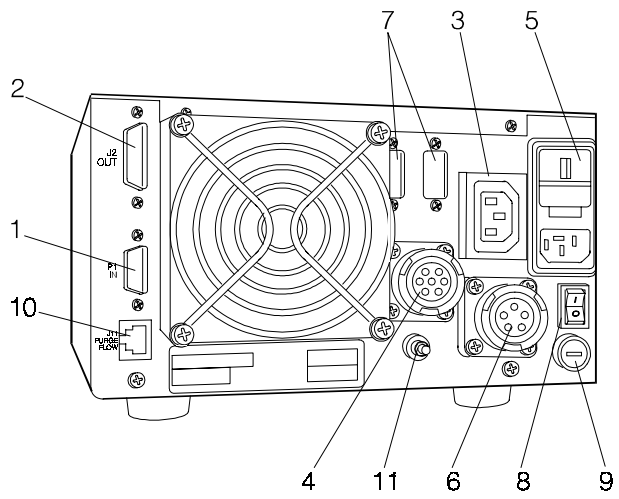


1. Connector voor ingang logische signalen (de te koppelen connector wordt met de speciale sluitklem geleverd).
2. Connector voor uitgang logische signalen en controle pompstroom en bekrachtigingsfrequentie.
3. Krachtstroomcontact (120 Vac, 1 A) voor de voeding van optionals (ventilatie-inrichting, relais voor activering primaire pomp, enz.).
4. Connector voor pompkabel.
5. Ingangsmodule van de voeding voor de controller. Omvat zekering, spanningswisseling, krachtcontact-stop en EMC filter.
6. Connector voor voedingskabel heater jacket.
7. Ruimte bestemd voor de connector van de seriële communicatiepoort RS-232 - RS-422 - RS-485 (geleverd als optie).
8. Hoofdschakelaar.
9. Zekering op stroomvoorziening van heater jacket.
10. Connector voor verbindingskabel naar stromingsmeter (flow meter).
11. Aardaansluiting.

*Achterpaneel van de controllers 969-9433 en 969-9533*

## GEBRUIKSPROCEDURES

### *Inschakelen van de controller*

Om de controller in te schakelen, de voedingskabel in de netcontactdoos inbrengen en de stroomschakelaar in stand 1 zetten.

### *Starten van de pomp*

Voor het starten van de pomp de START knop op het frontpaneel bedienen.

### *Stoppen van de pomp*

Voor het stoppen van de pomp de STOP knop op het frontpaneel bedienen.

## ONDERHOUD

De controllers van de serie Turbo-V 300 ICE zijn onderhoudsvrij. Eventuele werkzaamheden moeten door bevoegd personeel worden uitgevoerd.

In geval van storing is het mogelijk om de reparatiedienst van Varian of de "Varian advanced exchange service" in te schakelen: zo krijgt men een ruilcontroller ter vervanging van de defecte controller.

**GEVAAR!**

Alvorens werkzaamheden aan de controller uit te voeren, de voedingskabel afkoppelen.

Mocht de controller gesloopt worden, ga dan overeenkomstig de specifieke nationale wetgeving te werk.

## FOUTMELDINGEN

In geval van bepaalde storingen wekt het zelfdiagnose-circuit van de controller enkele foutmeldingen op die in de tabel op de volgende bladzijde zijn omschreven.

## GENEREL INFORMATION

Dette materiel er beregnet til professionel anvendelse. Brugeren bør læse denne brugsanvisning og anden yderligere information fra Varian, før udstyret anvendes. Varian tager ikke ansvar for skader helt eller delvis som følge af tilsidesættelse af disse instruktioner, fejlagtig brug af personer uden tilstrækkelig kendskab, ukorrekt anvendelse af udstyret eller håndtering, der strider imod gældende lokale regler.
Styreenhederne i Turbo-V 300 ICE serien er mikro-processorstyrede frekvens-omformere, der består af komponenter med fast tilstand.
Styreenhederne er udstyrede med selvdiagnose- og selvbeskyttelsesfunktioner. Styreenhederne kontrollerer pumperne i Turbo-V 300 ICE serien (med en ti-trins-proces) i forbindelse med start. Spænding og strøm reguleres i forhold til pumpens opnåede hastighed.
Styreenhederne omfatter alle kredsløb, der er nødvendig til automatisk drift af pumperne i Turbo-V 300 ICE serien.
Hjælpekontakter forsyner kontrol til fjernstart og -stop af pumpen, signaler om pumpens tilstand, kontrol til start og stop af forvakuumpumpen, blokeringssignaler (til tryk- og vandføringsafbrydere, osv.), kontrolsignalerne om varmebåndet (heater jacket), kontrolsignaler om gennemstrømningsmåler, samt om betjening af udluftningsventil (purge valve). De følgende afsnit indeholder al information, der er nødvendig for at garantere operatørens sikkerhed i forbindelse med anvendelse af udstyret. Detaljeret information findes i bilaget "Technical Information".

**I brugsanvisningen anvendes følgende standardrubrikker:**

**ADVARSEL !**

Advarselsmeddelelserne informerer operatøren om, at en speciel procedure eller en vis type arbejde skal udføres præcist efter anvisningerne. I modsat fald er der risiko for svære personskader.

**VIGTIGT !**

Denne advarselsmeddelelse vises før procedurer, der skal følges nøje for ikke at risikere maskinskader.

***BEMÆRK***

*Dette gør opmærksom på vigtig information i teksten.*

## OPBEVARING

Følgende krav til omgivelsesforholdene gælder ved transport og opbevaring af styreenheden:

- temperatur: fra -20 °C til +70 °C
- relativ luftfugtighed: 0 - 95%
  (ikke kondenserende)

## FORBEREDELSER FØR INSTALLATION

Styreenheden leveres i en speciel beskyttende emballage. Kontakt den lokale forhandler, hvis emballagen viser tegn på skader, der kan være opstået under transporten.
Sørg for at styreenheden ikke tabes eller udsættes for stød ved udpakningen.
Smid ikke emballagen ud. Materialet kan genbruges 100% og opfylder EU-direktiv 85/399 om miljøbeskyttelse.

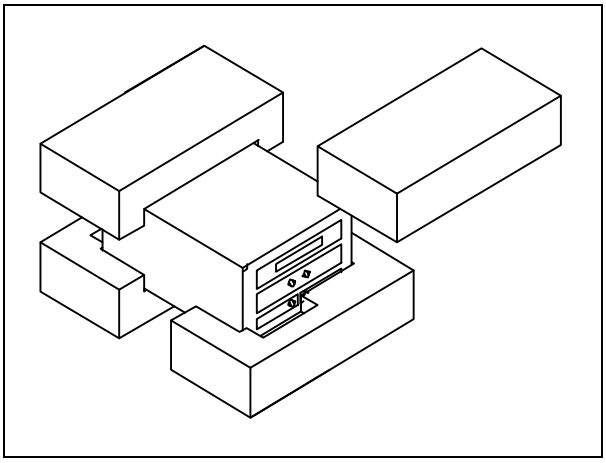

*Styreenhedens emballage*

Styreenheden leveres fra Varian forindstillet til en vis strømforsyning:

- modellen 969-9433 til 220 V vekselstrøm
- modellen 969-9533 til 120 V vekselstrøm

Kontrollér at den valgte spænding er korrekt. Tilslut strømkablet.

## INSTALLATION

**ADVARSEL!**

Styreenheden leveres med strømkabel med tre ledere og godkendt stik efter internationale standarder. Anvend udelukkende det medleverede strømkabel. Stikket må kun tilsluttes et vægudtag med fungerende jordtilslutning, for at undgå elektriske stød. Spænding frembragt i styreenheden kan nå høje værdier og forårsage stor skade og dødsfald. Frakobl altid strømkablet, inden der udføres installations- eller vedligeholdelsesarbejde på styreenheden.

***BEMÆRK***

*Styreenheden kan installeres på et bord eller et velegnet stativ. I begge tilfælde skal der være plads nok til, at luft kan cirkulerer frit omkring apparatet. Installér og anvend ikke styreenheden i miljøer, der udsættes for påvirkninger fra atmosfæren (regn, sne, is), damp, aggressive gasser, og ligeledes ikke i eksplosivt eller brandfarligt miljø.*

Følgende krav til omgivelsesforholdene gælder ved drift:
- temperatur: fra 0 °C til +40 °C
- relativ luftfugtighed: 0 - 95%
  (ikke kondenserende)

Pumpen og styreenheden tilsluttes med det specielle kabel, der leveres med styreenheden.

For øvrige tilslutninger og installation af tilbehør henvises til afsnittet "Technical Information".

## ANVENDELSE

Dette afsnit beskriver de vigtigste driftsprocedurer. For en detaljeret beskrivelse samt procedurer, der involverer tilslutninger eller tilbehør, henvises til afsnittet "Use" i bilag "Technical Information". Inden styreenheden anvendes, bør samtlige elektriske og pneumatiske tilslutninger udføres. Læs brugsanvisningen før pumpen tilsluttes.

**ADVARSEL!**

Sørg for, at pumpen står fast, hvis den er installeret på et bord. Dette er for at forebygge skader på apparatet og personer. Start aldrig pumpen, hvis pumpetilløbet ikke er tilsluttet systemet eller er blokeret.

***BEMÆRK***

*Afbryderkontakten J1 skal forblive tilsluttet med aktuel bro, når der ikke udføres eksterne tilslutninger. Forvakuumpumpen og Turbo-V-pumpen skal fungere samtidigt.*

### *Kontroller, Indikatorer og Kontakter på Styreenheden*

Følgende beskriver manøvrepanelet til styreenheden samt tilslutningspanelerne. For yderligere information henvises til bilag "Technical Information".

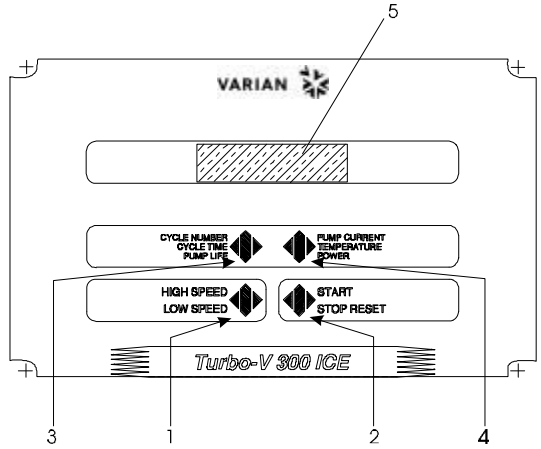


1. Trykknap til valg af HIGH/LOW SPEED driftvalg. Trykknappen fungerer kun, når der vælges drift fra frontpanelet. Ved at trykke på knappen flere gange efter hinanden skiftes fra HIGH SPEED til LOW SPEED.
2. Trykknap til overføring af START, STOP eller RESET. Trykknappen fungerer kun, når der vælges fra frontpanelet. Tryk på knappen en gang for at starte pumpen, tryk på knappen igen for at standse pumpen. Hvis pumpen standser automatisk ved en fejl, tryk på denne knap en gang for at tilbagestille styreenheden, og yderligere en gang for at starte pumpen igen.
3. Trykknap til at hente cycle number, cycle time og pump lift frem på displayet.
4. Trykknap til fremvisning af pump current, pump temperature, pump power , rotational speed, værdi for gennemstrømning, gastype samt alarmtilstand på displayet. Trykknappen fungerer uafhængigt af den valgte styretype. Når trykknapperne 3 og 4 holdes trykket ind samtidigt i mindst 2 sekunder, starter et program, der gør det muligt, at programmere visse driftparametre.
5. LCD-display med tal og bogstaver: punktmatrice, 2 rader med 16 tegn.

*Frontpanelet på Styreenheden*
*969-9433 og 969-9533*

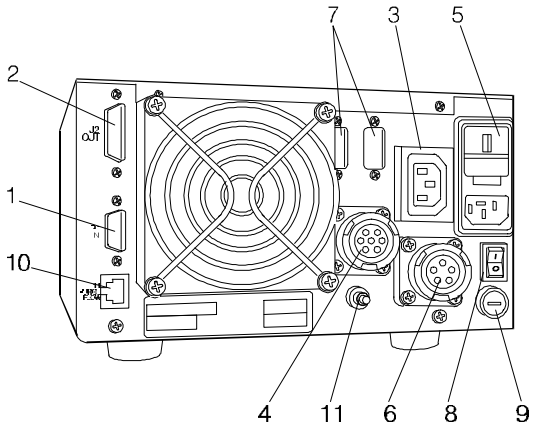


1. Indgangskontakt til logiske signaler (tilslutningskontakten leveres med specielt forbindelsesbro).
2. Udgangskontakten til logiske signaler og kontrol af pumpens strøm samt tilkoblingsfrekvens.
3. Udgangsstik med effekt (120 V vekselstrøm, 1 A) til forsyning til ekstraudstyr (ventilatorudstyr, relæ til aktivering af hovedpumpe osv.).
4. Kontakt til pumpens kabel.
5. Spændingsindgangsmodul til styreenheden. Modulet omfatter hovedsikringer, spændingsomkobler, udtag til hovedledning og EMC-filter.
6. Kontakt til forsyningskabel til heater jacket.
7. Tilgængelig plads til kontakt til serieport RS-232 - RS-422 - RS-485 (leveres som tilbehør).
8. Linieafbryder.
9. Sikring på forsyningsenhed til heater jacket.
10. Kontakt på kabel til tislutning af gennemstrømningsmåler (flow meter).
11. Jordforbindelse.

*Bageste panel på styreenheden 969-9433 og 969-9533*

## INSTRUKTION

### *Start af styreenheden*

Styreenheden startes ved at sætte strømkablet i vægudtaget og sæt hovedafbryderen i stilling 1.

### *Start af pumpen*

Pumpen startes ved at trykke på START-trykknappen.

### *Stop af pumpen*

Pumpen stopper ved at trykke på STOP-trykknappen på frontpanelet.

## VEDLIGEHOLDELSE

Styreenhederne i Turbo-V 300 ICE-serien behøver ikke nogen vedligeholdelse. Ethvert indgreb på pumpen skal foretages af autoriseret personale.

Hvis pumpen går i stykker, kan man benytte sig af Varians reparations-service eller Varian udvekslingsservice, hvor man kan få en repareret pumpe i bytte for den, der er gået i stykker.

**ADVARSEL !**

Inden der foretages noget som helst indgreb på styreenheden, skal strømmen først afbrydes.

Skrotning af pumpen skal foregå i overensstemmelse med det pågældende lands særlige love.

## FEJLMEDDELELSER

Når visse fejl opstår, viser styreenheden ved selvdiagnose aktuelle fejl på displayet. De mulige meddelelser beskrives i tabellen på følgende side.

| MEDDELELSE | BESKRIVELSE | KONTROL |
|---|---|---|
| **CHECK CONNECTION TO PUMP** | Tilslutning mellem pumpe og styreenhed er defekt. | Kontrollér at tilslutningskabel mellem pumpe og styreenhed er korrekt monteret samt at ingen afbrydninger forekommer. Tryk to gange på START for at starte pumpen igen. |
| **PUMP WAITING INTERLOCK** | Interlocksignalet findes på kontakt P1 p.g.a. kortslutning mellem stift 3 og stift 8 i kontakten J1 eller p.g.a. at det eksterne interlocksignal er åbent. | Tilbagestil kortslutningen mellem stift 3 og stift 8 på kontakt J1 eller sluk for det eksterne interlocksignal. |
| **FAULT: PUMP OVERTEMP.** | Temperaturen i det øverste leje eller pumpen er over 60 °C. | Vent på, at temperaturen falder til under tærskelværdi.<br>Tryk to gange på START for at starte pumpen igen. |
| **FAULT: CONTROLLER OVERTEMPERATURE** | Temperaturen på styreenhedens transformator er over 90 °C. | Vent på, at temperaturen falder til under tærskelværdi.<br>Tryk to gange på START for at starte pumpen igen. |
| **FAULT: TOO HIGH LOAD** | Under normal drift er pumpens strømforbrug større end den programmerede værdi (3 A). | Kontrollér, at pumpens rotor kan rotere frit.<br>Tryk to gange på START for at starte pumpen igen. |
| **FAULT: SHORT CIRCUIT** | Under normal drift (efter startfasen) er udgangseffekten kortsluttet (udgangsstrømmen højere end 6 A). | Kontrollér forbindelserne mellem pumpe og styreenhed.<br>Tryk to gange på START for at starte pumpen igen. |
| **OVERVOLTAGE** | Defekt i styreenhedens forsyning, eller styreenheden har modtaget et ikke korrekt signal. | Tryk to gange på START for at starte pumpen igen.<br>Såfremt meddelelsen fremvises på ny, rettes henvendelse til Varian for foretagelse af vedligeholdelse. |
| **FLOW METER ALARM** | Alarm for udluftningsventil. Værdien for gennemstrømningen er under den indtastede tærskelværdi i et tidsrum på min. 10 sekunder. | Kontrollér, at kredsløbet til gasforsyning fungerer korrekt. |

## ALLMÄN INFORMATION

Utrustningen är avsedd för yrkesmässig användning. Användaren bör läsa denna bruksanvisning, samt övrig dokumentation från Varian före användning av utrustningen. Varian tar inget ansvar för skador som helt eller delvis orsakats av åsidosättande av instruktionerna, olämplig användning av person utan tillräcklig kunskap, obehörigt bruk av utrustningen eller hantering som strider mot gällande lokala föreskrifter.
Styrenheterna i Turbo-V 300 ICE-serien är mikroprocessorstyrda frekvensomvandlare som består av komponenter med fast tillstånd. Styrenheterna är försedda med självdiagnos- och självskyddsfunktion.
Styrenheterna kontrollerar pumparna i Turbo-V 300 ICE-serien (med en tiostegs-process) i samband med start. Spänning och ström regleras i förhållande till pumpens uppnådda hastighet.
Styrenheterna omfattar alla kretsar som behövs för automatisk drift av pumparna i Turbo-V 300 ICE-serien.
Hjälpkontakter erbjuder kontroller för fjärrstart och fjärrstopp av pumpen, signaler för pumpens tillstånd, kontroller för start och stopp av förvakuumpumpen, blockeringssignaler (för tryckvakter, kontrollbrytare för vattenflöde osv) kontrollsignaler för uppvärmningsområdet (heater jacket), flödesmätare och för styrning av rengöringsventilen (purge valve). De följande avsnitten innehåller all information som behövs för att garantera operatörens säkerhet under driften. Detaljerade uppgifter finns i bilagan "Technical information".

**I bruksanvisningen används följande standard-rubriker:**

**VARNING**

Varningsmeddelandena informerar operatören om att en speciell procedur eller en viss typ av arbete måste utföras exakt enligt anvisningarna. I annat fall finns risk för svåra personskador.

**VIKTIGT**

Detta varningsmeddelande visas framför procedurer som måste följas exakt för att undvika skador på maskinen.

***OBSERVERA***

*Detta visar på viktig information i texten.*

## FÖRVARING

Följande krav på omgivningsförhållanden gäller vid transport och förvaring av styrenheten:

- temperatur: från -20 °C till +70 °C
- relativ luftfuktighet: 0 - 95% (utan kondens)

## FÖRBEREDELSER FÖR INSTALLATION

Styrenheten levereras i ett särskilt skyddande emballage. Kontakta det lokala försäljningskontoret om emballaget visar tecken på skador som kan ha uppstått under transporten.
Se till att styrenheten inte tappas eller utsätts för stötar vid uppackningen.
Kasta inte packmaterialet i soporna. Materialet är återvinningsbart till 100% och uppfyller EU-direktiv 85/399 om miljöskydd.

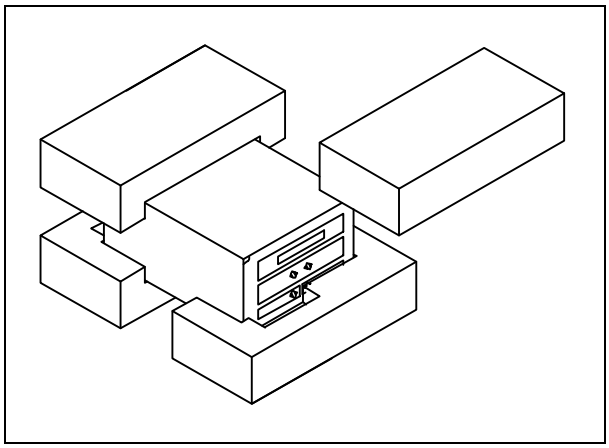

*Styrenhetens förpackning*

Styrenheten levereras från Varian med förinställning för en viss matningsspänning:

- modellen 969-9433 för 220 V växelström
- modellen 969-9533 för 120 V växelström

Kontrollera att den valda matningsspänningen är korrekt. Återanslut strömkabeln.

## INSTALLATION

**VARNING**

Styrenheten levereras med strömkabel med tre ledare och godkänd stickpropp enligt internationella standarder. Använd endast den medlevererade strömkabeln. Stickproppen får endast anslutas till ett vägguttag med fungerande jordanslutning för att undvika elstötar.
Spänningen inuti styrenheten kan nå höga värden och förorsaka allvarliga skador och dödsfall. Frånkoppla alltid strömkabeln innan något installations- eller underhållsmoment utförs på styrenheten.

***OBSERVERA***

*Styrenheten kan installeras på ett bord eller inuti ett därtill avsett rack. I samtliga fall måste dock kylluften kunna cirkulera fritt kring apparaten.*
*Installera och använd inte styrenheten i miljöer som utsätts för påverkan från atmosfären (regn, snö, is), damm, aggressiva gaser, och inte heller i explosiv eller brandfarlig miljö.*

Följande krav på omgivningsförhållanden gäller vid drift:

- temperatur: från 0 °C till +40 °C
- relativ luftfuktighet: 0 - 95% (utan kondens)

Pumpen och styrenheten ansluts med den speciella kabeln, som levereras med styrenheten.

Beträffande övriga anslutningar och installation av tillbehör hänvisas till avsnittet "Technical Information".

## ANVÄNDNING

Detta avsnitt beskriver de viktigaste driftmomenten. För en detaljerad beskrivning samt beträffande moment som involverar anslutningar eller tillbehör hänvisas till avsnittet "Use" i bilaga "Technical Information". Innan styrenheten används bör samtliga elektriska och pneumatiska anslutningar utföras. Läs bruksanvisningen för den anslutna pumpen.

**VARNING**

Försäkra dig om att pumpen står stadigt, om den är installerad på ett bord, detta för att förebygga skador på apparaten och personer. Sätt aldrig igång pumpen, om intagsflänsen varken är kopplad till systemet eller är blockerad på plats med låsflänsen.

***OBSERVERA***

*Stängningskontakten J1 måste lämnas ansluten med aktuell brygga om ingen extern anslutning utförs. Förvakuumpumpen och Turbo-V-pumpen kan fungera samtidigt.*

### *Kontroller, Indikatorer och Kontakter på Styrenheten*

Nedan beskrivs manöverpanelen för styrenheten samt anslutningspanelerna. För ytterligare information hänvisas till bilaga "Technical Information".

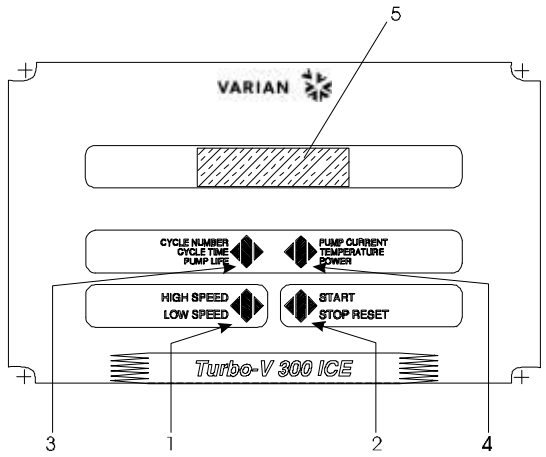


1. Tryckknapp för inställning av HIGH/LOW SPEED driftsätt. Tryckknappen fungerar endast när styrsätt från frontpanelen har valts. Genom att trycka på knappen upprepade gånger går du stegvis från HIGH SPEED till LOW SPEED driftsättet.
2. Tryckknapp för överföring av START, STOP eller RESET. Tryckknappen fungerar endast när styrsätt från frontpanelen har valts. Tryck på knappen en gång för att starta pumpen, tryck på knappen igen för att stanna pumpen. Om pumpen stannat automatiskt i samband med ett fel, tryck på denna knapp en gång för att återställa styrenheten, och ytterligare en gång för att starta om pumpen.
3. Tryckknapp för att hämta parametrarna cycle number, cycle time och pump life på displayen.
4. Tryckknapp för att hämta parametrarna pump current, pump temperature, pump power, rotational speed, det uppmätta flödesvärdet, gastyp och larmtillstånd på displayen. Tryckknappen fungerar alltid, oavsett det valda styrsättet. När tryckknapparna 3 och 4 hålls samtidigt intryckta i minst 2 sekunder, startas ett program som tillåter att programmera vissa driftparametrar.
5. LCD-display med siffror och bokstäver: punktmatris, 2 rader med 16 tecken.

*Frontpanelen på Styrenheten*
*969-9433 och 969-9533*

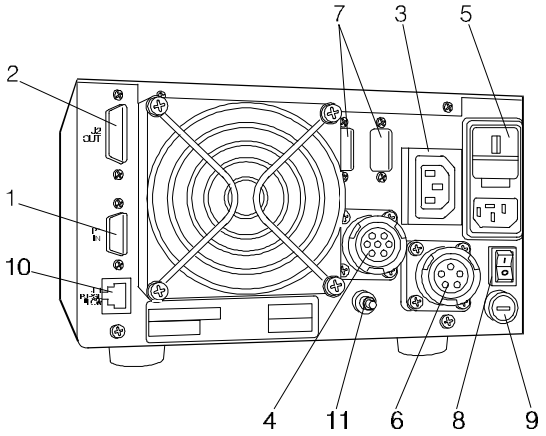


1. Ingångskontakt för logiska signaler (anslutningskontakten levereras med speciell stängningsbrygga).
2. Utgångskontakt för logiska signaler och kontroll av pumpens ström samt magnetiseringsfrekvens.
3. Utgångsuttag för effekt (120 V växelström, 1 A) för matning av tillbehörsredskap (vent device, primärpumpens aktiveringsrelä, osv.).
4. Pumpens kontaktkabel.
5. Spänningsingångsmodul för styrenheten. Modulen omfattar skyddssäkring, spänningsomkopplare, uttag för spänningsmatning och EMC-filter.
6. Kontakt för spänningskabel till heater jacket.
7. Tillgängligt utrymme för kontakt till seriell port RS-232 - RS-422 - RS-485 (levereras som tillbehör).
8. Nätbrytare.
9. Säkring på spänningsmatning till heater jacket.
10. Kontakt för anslutningskabel till flödesmätare (flow meter).
11. Jordanslutning.

*Bakre panel på Styrenheten 969-9433 och 969-9533*

## INSTRUKTIONER FÖR BRUK

### *Start av styrenheten*

Styrenheten startas enkelt genom att sätta strömkabeln i vägguttaget och sätt huvudströmbrytaren i läge 1.

### *Start av pumpen*

Pumpen startas genom att trycka på tryckknappen START.

### *Stopp av pumpen*

Pumpen stoppas genom att trycka på tryckknappen STOPP på frontpanelen.

## UNDERHÅLL

Styrenheterna i Turbo-V 300 ICE-serien är underhållsfria. Allt servicearbete måste utföras av auktoriserad personal.

Om styrenheten havererar, kontakta Varian reparationsverkstad eller Varian utbytesservice, som kan ersätta styrenheten med en renoverad styrenhet.

**VARNING**

Innan något arbete utförs på styrenheten måste dess strömförsörjning brytas.

Skrotning av pumpen ska ske enligt gällande lagstiftning.

## FELMEDDELANDEN

När vissa fel uppstår visar styrenhetens självdiagnoskrets aktuellt felmeddelande på displayen. De möjliga meddelandena listas i följande tabell.

| MEDDELANDE | BESKRIVNING | ÅTGÄRD |
|---|---|---|
| **CHECK CONNECTION TO PUMP** | Anslutningen mellan pump och styrenhet är defekt. | Kontrollera att anslutningskabeln mellan pump och styrenhet är ordentligt monterad samt att inget avbrott förekommer. Tryck två gånger på knappen START för att starta om pumpen. |
| **PUMP WAITING INTERLOCK** | Interlock-signalen finns på kontakt P1 på grund av kortslutning mellan stift 3 och stift 8 i kontakten J1, eller på grund av att den externa interlock-signalen är öppen. | Åtgärda kortslutningen mellan stift 3 och stift 8 på kontakt J1 eller stäng den externa interlock-signalen. |
| **FAULT: PUMP OVERTEMP.** | Temperaturen på det övre lagret eller pumpen överskrider 60 °C. | Vänta tills temperaturen sjunker under tröskelvärdet.<br>Tryck två gånger på knappen START för att starta om pumpen. |
| **FAULT: CONTROLLER OVERTEMPERATURE** | Temperaturen på styrenhetens transformator överskrider 90 °C. | Vänta tills temperaturen sjunker under tröskelvärdet.<br>Tryck två gånger på knappen START för att starta om pumpen. |
| **FAULT: TOO HIGH LOAD** | Under normal drift förbrukar pumpen en större effekt än det programmerade värdet (3 A). | Kontrollera att pumpens rotor kan rotera fritt.<br>Tryck två gånger på knappen START för att starta om pumpen. |
| **FAULT: SHORT CIRCUIT** | Under normal drift (efter startmomentet) har utgången kortslutits (utgångsström högre än 6 A). | Kontrollera anslutningarna mellan pump och styrenhet.<br>Tryck två gånger på knappen START för att starta om pumpen. |
| **OVERVOLTAGE** | Ett fel har upptäckts i styrenhetens spänningsmatning eller styrenheten har fått en falsk signal. | Tryck två gånger på knappen START för att starta om pumpen.<br>Om meddelandet upprepas kontakta Varian för underhåll. |
| **FLOW METER ALARM** | Larm angående rengöringsflödet. Värdet är under det inmatade tröskelvärdet under 10 sekunder eller längre. | Kontrollera korrekt funktion av gasens matningskrets. |

## GENERELL INFORMASJON

Dette utstyret er beregnet til bruk av profesjonelle brukere. Brukeren bør lese denne brukerveiledningen og all annen informasjon fra Varian før utstyret tas i bruk.
Varian kan ikke holdes ansvarlig for hendelser som skjer på grunn av manglende oppfølging, selv delvis, av disse instruksjonene, feilaktig bruk av utrenet personell, ikke godkjente endringer av utstyret eller handlinger som på noen måte er i strid med nasjonale bestemmelser.
Styreenhetene i Turbo-V 300 ICE serien er mikroprosessorstyrte frekvensomformere, som består av komponenter med fast tilstand. Styreenhetene har funksjoner for selvdiagnose og selvbeskyttelse.
Styreenhetene kontrollerer pumpene i Turbo-V 300 ICE serien (med en titrinnsprosess) ved oppstart. Spenning og strømstyrke justeres i forhold til pumpens oppnådde hastighet.
Styreenhetene omfatter alle kretser som er nødvendige for automatisk drift av pumpene i Turbo-V 300 ICE serien.
Hjelpekontakter gir muligheter for fjernstyrt start og stopp av pumpen, signaler for pumpens tilstand, kontroller for start og stopp av forvakuumpumpen, blokkeringssignaler (for trykksensorer, kontrollbrytere for vannflyt osv), kontrollsignaler for varmebåndet (heater jacket), strømningsmålerens kontrollsignal, og signaler for styringen av spyleventilen (purge valve). De følgende avsnittene inneholder all informasjon som er nødvendig for å sikre brukeren når utstyret er i bruk. For mer detaljert bruk vises det til tillegget "Technical Information".

**Denne veiledningen bruker følgende standard-protokoll:**

**ADVARSEL**

Disse meldingene skal tiltrekke seg brukerens oppmerksomhet til en spesiell fremgangsmåte eller praksis som, hvis den ikke følges, kan medføre alvorlige skader.

**FORSIKTIG**

Denne advarselen vises foran fremgangsmåter som, dersom de ikke følges, kan fore til at utstyret skades.

***MERK***

*Merknadene inneholder viktig informasjon som er hentet fra teksten.*

## LAGRING

Når styreenhetene transporteres eller lagres, må følgende forhold være oppfylt:
- temperatur: fra 20 °C til +70 °C
- relativ fuktighet: 0 - 95% (uten kondens)

## FORBEREDE INSTALLASJONEN

Styreenheten leveres i en spesiell beskyttelsesemballasje. Viser denne tegn på skader som kan ha oppstått under transporten, må du ta kontakt med det lokale salgskontoret.
Når styreenheten pakkes ut, må du passe på at den ikke slippes ned eller utsettes for noen form for støt.
Emballasjen må ikke kastes på en ulovlig måte. Alle materialer er 100% resirkulerbare og er i samsvar med EU-direktiv 85/399 om miljøbeskyttelse.

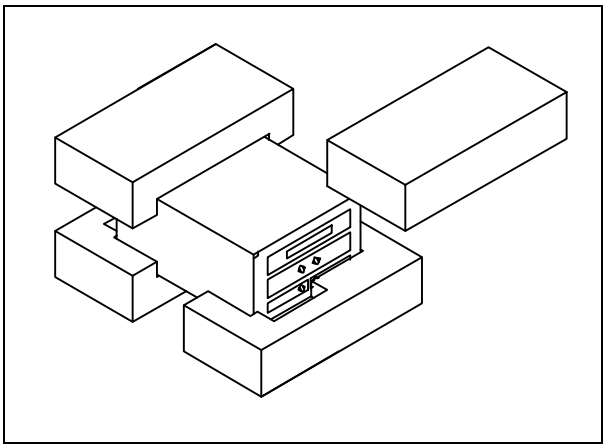

*Styreenhetens emballasje*

Styreenheten leveres fra Varian med forhåndsinnstillinger for en viss nettspenning:

- modellen 969-9433 for 220 V vekselstrøm
- modellen 969-9533 for 120 V vekselstrøm

Kontroller at den valgte nettspenningen er korrekt, og kople maskinen til strømnettet.

## INSTALLASJON

**ADVARSEL**

Styreenheten leveres med strømkabel med tre ledere og godkjent støpsel i henhold til internasjonale standarder. Bruk kun den vedlagte strømkabelen. Støpslet må kun benyttes i en veggkontakt som har tilfredsstillende jording, slik at faren for strømstøt kan unngås. Spenningen inne i styreenheten kan nå høye verdier og kan føre til alvorlige skader og dødsfall. Kople alltid strømkabelen fra strømnettet før alle installasjons- eller vedlikeholdsarbeider som utføres på styreenheten.

***MERK***

*Styreenheten kan installeres på et bord eller inne i et passende stativ. Uansett så må kjøleluften kunne sirkulere fritt rundt apparatet. Ikke installer eller bruk styreenheten i miljøer som utsettes for regn, snø eller is, støv, aggressive gasser, eksplosjonsfarlige miljøer eller i miljøer med stor brannfare.*

Under bruk må følgende forhold respekteres:
- temperatur: fra 0 °C til +40 °C
- relativ fuktighet: 0 - 95% (uten kondens)

Pumpen og styreenheten tilkoples den spesielle kabelen som leveres sammen med styreenheten.

Når det gjelder andre tilkoplinger og installasjon av ekstrautstyr vises det til avsnittet "Technical Information".

## BRUK

Dette avsnittet beskriver de viktigste driftsmomentene. For en detaljert beskrivelse samt moment som omfatter tilkoplinger eller ekstrautstyr vises det til avsnittet "Use" i vedlegget "Technical Information". Før styreenheten tas i bruk bør samtlige elektriske og pneumatiske tilkoplinger gjøres. Les brukerveiledningen for pumpen som er tilkoplet.

**ADVARSEL**

Dersom pumpen er installert på et bord må du kontrollere at pumpen står støtt. Dette er viktig for å forhindre skader på apparatet og på personer. Dersom inngangsflensen hverken er tilkoplet systemet eller dersom den er blokkert av låseflensen må pumpen aldri startes opp.

***MERK***

*Lukkekontakten J1 må være tilkoplet aktuell brygge dersom det ikke skjer en annen ekstern tilkopling. Forvakuumpumpen og Turbo-V-pumpen må fungere sammen.*

### *Kontroller, Indikatorer og Kontakter på Styreenheten*

Nedenfor beskrives styrepanelet til styreenheten samt tilkoplingspanelene. For ytterligere informasjon vises det til avsnittet "Accessories and Spare Parts" i vedlegget "Technical Information".

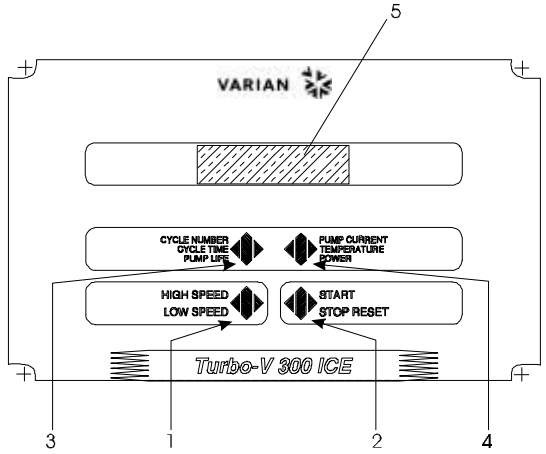


1. Trykknapp for innstilling av HIGH/LOW SPEED drift. Trykknappen fungerer kun når det er valgt styremåte fra frontpanelet. Når du trykker på knappen gjentatte ganger, går du omvekslende fra HIGH SPEED til LOW SPEED.
2. Trykknapp for overføring av START, STOP eller RESET. Trykknappen fungerer kun når det er valgt styremåte fra frontpanelet. Trykk på knappen en gang for å starte pumpen, trykk på knappen igjen for å stanse pumpen. Har pumpen stanset automatisk i forbindelse med en feil, trykk en gang på denne knappen for å tilbakestille styreenheten, en gang til for å startet pumpen.
3. Trykknapp for å vise parametrene cycle number, cycle time og pump life på displayet.
4. Trykknapp for å vise parametrene pump current, pump temperature, pump power og rotational speed, verdien til målt strømning, gasstypen og alarmtilstanden på displayet. Trykknappen fungerer alltid, uavhengig av styremåten. Når trykknappene 3 og 4 trykkes ned samtidig i minst to sekunder, startes et program som tillater utvelging av visse driftsparametre.
5. LCD-display med siffer og bokstaver: punktmatrise, 2 rader med 16 tegn.

*Frontpanelet på styreenheten*
*969-9433 og 969-9533*

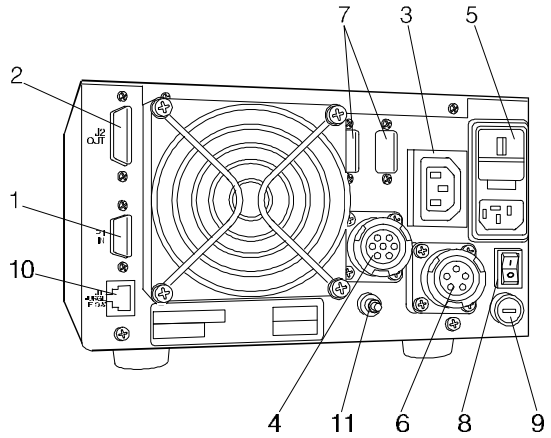


1. Inngangskontakt for logiske signaler (tilkoplingskontakten leveres med spesiell lukkebrygge).
2. Utgangskontakt for logiske signaler og kontroll av pumpens strøm og magnetiseringsfrekvens.
3. Effektuttak (120 Vac, 1 A) for forsyningen av tileggsanordningene (vent device, primærpumpens aktiveringsrelè, osv.).
4. Pumpens kabelkopling.
5. Spenningsinngangsmodul for styreenheten. Modulen omfatter vernesikring, spenningsomkopler, uttak for spenningsmåling og EMC-filter.
6. Koplingsstykke for nettkabelen til heater jacket.
7. Tilgjengelig plass for kontakt til seriekanal RS-232 - RS-422 - RS-485 (leveres som ekstrautstyr).
8. Hovedbryter.
9. Sikring på forsyningen til heater jacket.
10. Koplingsstykket til strømningsmålerens koplingskabel (flow meter).
11. Jordkopling.

*Bakpanelet på styreenheten 969-9433 og 969-9533*

## INSTRUKSJONER FOR BRUK

### *Starte styreenheten*

Styreenheten startes ved å sette strømkabelen i veggkontakten og sett hovedbryteren i stilling 1.

### *Starte pumpen*

Pumpen startes ved å trykke på knappen START.

### *Stoppe pumpen*

Pumpen stoppes ved å trykke på knappen STOPP på frontpanelet.

## VEDLIKEHOLD

Turbo-V 300 ICE seriens styreenheter er vedlikeholdsfrie. Alt arbeid på styreenheten må kun utføres av autorisert personell.

Dersom styreenheten stanser, må du ta kontakt med Varians reparasjonservice eller med Varians avanserte bytteservice, som kan tilby overhalte styreenheter til erstatning for den ødelagte styreenheten.

**ADVARSEL**

Før noe arbeid utføres på styreenheten, må den frakoples strømnettet.

Dersom en styreenhet skal kasseres, må dette skje i henhold til nasjonale bestemmelser.

## FEILMELDINGER

Når det oppstår visse feil viser selvdiagnosekretsen i styreenheten den aktuelle feilmeldingen i displayet. De aktuelle feilmeldingen fremgår av tabellen nedenfor.

| MELDING | BESKRIVELSE | FORHOLDSREGEL |
|---|---|---|
| **CHECK CONNECTION TO PUMP** | Defekt kopling mellom pumpe og styreenhet. | Kontroller at tilkoplingskabelen mellom pumpe og styreenhet er skikkelig montert samt at kabelen ikke er skadet. Trykk to ganger på knappen START for å starte pumpen. |
| **PUMP WAITING INTERLOCK** | Låsesignalet for kontakt P1 skyldes en kortslutning mellom stift 3 og stift 8 i kontakten J1 eller fordi det eksterne låsesignalet er åpent. | Tilbakestill kortslutningen mellom stift 3 og stift 8 på kontakt J1 eller steng det eksterne låsesignalet. |
| **FAULT: PUMP OVERTEMP.** | Temperaturen på pumpens øverste lager er over 60 °C. | Vent til temperaturen synker under terskelverdien.<br>Trykk to ganger på knappen START for å starte pumpen. |
| **FAULT: CONTROLLER OVERTEMPERATURE** | Temperaturen på styreenhetens transformator er over 90 °C. | Vent til temperaturen synker under terskelverdien.<br>Trykk to ganger på knappen START for å starte pumpen. |
| **FAULT: TOO HIGH LOAD** | Ved normal drift har pumpen et strømforbruk som er høyere enn det som er programmert (3 A). | Kontroller om pumpens rotor kan rotere fritt.<br>Trykk to ganger på knappen START for å starte pumpen. |
| **FAULT: SHORT CIRCUIT** | Ved normal drift (etter startmomentet) er utgangen kortsluttet (utgangsstrøm over 6 A). | Kontroller tilkoplingene mellom pumpe og styreenhet.<br>Trykk to ganger på knappen START for å starte pumpen. |
| **OVERVOLTAGE** | Det er en feil i styreenhetens forsyningsseksjon, eller styreenheten har mottatt et falsk signal. | Trykk to ganger på knappen START for å starte pumpen.<br>Hvis meldingen dukker opp igjen, må du ta kontakt med Varian for vedlikehold. |
| **FLOW METER ALARM** | Alarm for purgestrømningen. Strømningsverdien har i 10 sekunder eller mer, blitt liggende på en verdi som er lavere enn innstilt terskel. | Kontroller at gassmatekretsen fungerer riktig. |

## YLEISIÄ TIETOJA

Tämä laite on tarkoitettu ammattimaiseen käyttöön. Ennen laitteen käyttöönottoa käyttäjän tulee lukea huolellisesti mukana seuraava käyttöohje sekä kaikki muut Varianin toimittamat lisätiedot. Varian ei vastaa seurauksista, jotka johtuvat laitteen käyttöohjeiden täydellisestä tai osittaisesta laiminlyömisestä, ammattitaidottomien henkilöiden suorittamasta laitteen virheellisestä käytöstä, valtuuttamattomista toimenpiteistä tai maakohtaisten säädösten ja normien vastaisesta käytöstä.
Sarjan Turbo-V 300 ICE valvojat ovat mikro-prosessoreiden valvomia kiinteistä materiaaleista tehtyjä taajuudenmuuntimia, jotka kykenevät itsemäärittelyyn ja itsesuojaukseen.
Valvojat ajavat Turbo-V 300 ICE-sarjan pumppuja (kymmenportaisessa järjestelmässä) käynnistys-vaiheessa valvoen jännitettä ja sähkövirtaa suhteessa pumpun saavuttamaan nopeuteen.
Ne sisältävät kaikki virtapiirit, jotka ovat välttämättömiä Turbo-V 300 ICE - sarjan pumppujen automaattiselle toiminnalle. Apuliittimien kautta voidaan käyttää pumpun kauko-ohjattavia käynnistys- ja pysäytyslaitteita; signaaleja, jotka ilmaisevat pumpun toimintatilan; esityhjiöpumpun käynnistys- ja pysäytyslaitteita; pysäytyssignaaleja (painekatkai-simille, virtauksen ohjauskatkaisimille, jne.); kuumennusvaipan ohjaussignaaleja; virtausmittarin ohjaussignaaleja ja puhdistusventtiilin ohjaussignaaleja.
Seuraavissa kappaleissa on kaikki tarpeelliset tiedot käyttäjän turvallisuuden takaamiseksi laitteen käytön aikana. Yksityiskohtaiset tiedot löytyvät liitteestä "Tekniset tiedot".

**Tämä ohjekirja käyttää seuraavia merkintöjä:**

**VAARA!**

Vaara-merkinnät saavat käyttäjän huomion kiinnittymään erityisiin toimintotapoihin, joiden seuraamatta jättäminen voi aiheuttaa vakavia henkilövaurioita.

**HUOMIO !**

Huomio-merkinnät varoittavat toiminnoista, joiden laiminlyönti voi johtaa laitteen vaurioitumiseen.

***HUOM***

*Huomiot sisältävät tärkeää tekstistä otettua tietoa.*

## VARASTOINTI

Valvojan kuljetuksen ja varastoinnin aikana tulevat seuraavat ympäristövaatimukset olla täytettyinä:
- lämpötila: -20 °C ja +70 °C asteen välillä
- suhteellinen kosteus: 0 - 95% (ilman lauhdetta)

## VALMISTELUT ASENNUSTA VARTEN

Valvoja toimitetaan erityisessä suojaavassa pakkauksessa. Mikäli havaitsette mahdollisesti kuljetuksen aikana tapahtuneita vaurioita, ottakaa yhteys paikalliseen myyntitoimistoon.
Pakkauksen purkamisen yhteydessä huolehtikaa, että valvoja ei pääse putoamaan ja välttäkää sen joutumista iskujen kohteeksi.
Älkää jättäkö pakkausta ympäristöön. Materiaali voidaan kokonaisuudessaan kierrättää ja se vastaa EU:n 85/399 direktiiviä ympäristön suojelusta.

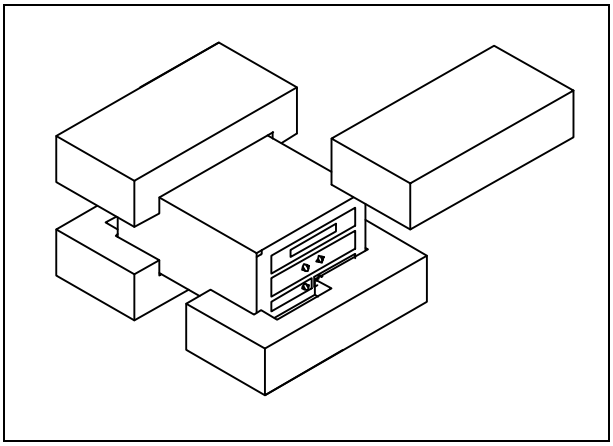

*Valvojan pakkaus*

Jokainen valvoja on Varianilla säädetty tietylle sähköjännitteelle:

- malli 969-9433 220 V:n vaihtovirralle
- malli 969-9533 120 V:n vaihtovirralle

Tarkistakaa, että valittu jännite on oikea ja kytkekää virtakaapeli uudelleen.

## ASENNUS

**VAARA!**

Valvoja toimitetaan kolmijohtoisella sähkökaapelilla, jonka pistoke on kansainvälisesti hyväksytty. Käyttäkää aina tätä kaapelia ja asettakaa pistoke riittävästi maadoitettuun pistorasiaan, jotta sähköiskuilta vältytään.
Valvojan sisällä syntyy korkeajännitettä, joka voi aiheuttaa vakavia vammoja tai jopa kuoleman. Ennen minkä tahansa valvojan huolto- tai asennustoimenpiteen suorittamista, irrottakaa valvoja sähköverkosta.

***HUOM***

*Valvoja voidaan asentaa pöydän päälle tai siihen tarkoitukseen sopivan hyllyn sisään. Joka tapauksessa huolehtikaa siitä, että riittävä jäähdytysilma pääsee vapaasti kiertämään laitteen sisällä. Älkää asentako ja/tai käyttäkö valvojaa tiloissa, joissa se joutuu alttiiksi ympäristötekijöille (sade, jää, lumi), pölylle, syövyttäville kaasuille, räjähdysalttiissa ympäristössä tai tiloissa, joissa paloriski on suuri.*

Toiminnan aikana tulee noudattaa seuraavia ympäristöolosuhteita koskevia sääntöjä:

- lämpötila: 0 °C ja +40 °C välillä
- suhteellinen kosteus: 0 - 95% välillä (ilman lauhdetta)

Valvojaa kytkettäessä sille tarkoitettuun pumppuun käyttäkää valvojalle tarkoitettua erityiskaapelia.

Muiden kytkentöjen ja valinnaisten lisälaitteiden asennusten suorittamiseksi, katsokaa kappaletta "Tekniset tiedot".

## KÄYTTÖ

Tähän kappaleeseen on kirjattu tärkeimmät käyttötoimenpiteet. Tarkempia lisätietoja sekä kytkentöjä ja valinnaisia lisälaitteita koskevien toimenpiteiden suorittamista käsitteleviä tietoja löydätte kappaleesta "Käyttö", joka on "Tekniset tiedot"-kappaleen liitteenä. Ennen valvojan käyttöä suorittakaa kaikki sähkökytkennät seuraten kytkettävän pumpun käyttöohjeita.

**VAARA!**

Mikäli pumppu on asetettu pöydälle, varmistakaa että se on vakaa. Näin vältytään vammoilta ihmisille sekä itse koneelle. Älkää myöskään käyttäkö pumppua, mikäli sisääntulon laippaa ei ole kytketty järjestelmään tai mikäli sitä ei ole suljettu laippasulkijalla.

***HUOM***

*Sulkimen J1 liitin tulee jättää yhdyskaapelilla kytketyksi, mikäli ulkoisia kytkentöjä ei suoriteta. Esityhjiöpumppu ja Turbo-V-pumppu voidaan käynnistää samanaikaisesti.*

### *Valvojan Säätimet, Osoittimet ja Liittimet*

Seuraavassa on esitelty Valvojan valvontapaneeli ja yhteyspaneeli. Tarkempia lisätietoja saatte kappaleesta "Tekniset Tiedot".

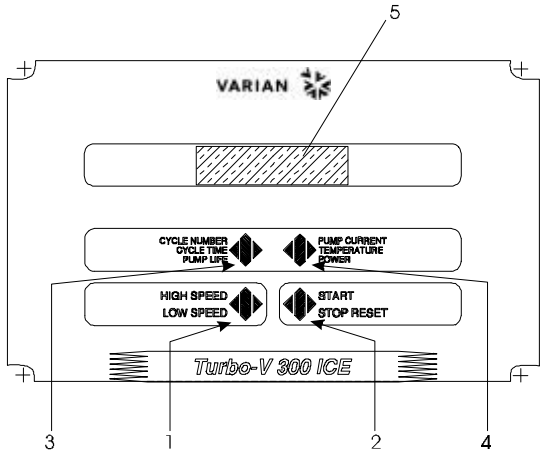


1. HIGH/LOW SPEED -tilan valintapainonappi. Aktivoituu ainoastaan, kun valittuna on etupaneelin ohjaustila. Painettaessa painonappia toistuvasti siirrytään vaiheittain HIGH SPEED -tilasta LOW SPEED -tilaan.
2. KÄYNNISTYKSEN, PYSÄYTYKSEN JA UUDELLEENASETUKSEN käskyjen painonappi. Se aktivoituu ainoastaan, kun valittuna on etupaneelin toiminta-moodi. Yhden kerran painettaessa käynnistysvaihe aktivoituu. Uudelleen painettaessa pumppu pysähtyy. Mikäli pumppu on toimintahäiriön vuoksi pysähtynyt automaattisesti, painakaa painonappia yhden kerran, jolloin valvoja saadaan asetettua uudelleen. Toisen kerran painonappia painettaessa pumppu käynnistyy.
3. Painonappi, jonka avulla näyttöön saadaan kiertonumero, kiertoaika ja pumpun toiminta.
4. Painonappi, jonka avulla näyttöön ilmaantuvat pumpun sähkövirran, pumpun lämpötilan, pumpun tehon, kiertonopeuden, havaitun virtausarvon, kaasutyypin ja hälytystilan parametrit. Tämä on aina käytössä riippumatta valitusta toiminnosta. Painettaessa painonappeja 3 ja 4 vähintään kahden sekunnin ajan aktivoituu ohjelma, jonka avulla on mahdollista valita joitakin toimintaparametrejä.
5. Aakkosnumeerinen nestekidenäyttö: pistematriisi, 2 riviä x 16 merkkiä.

*Valvojien 969-9433 ja 969-9533 etupaneelit*

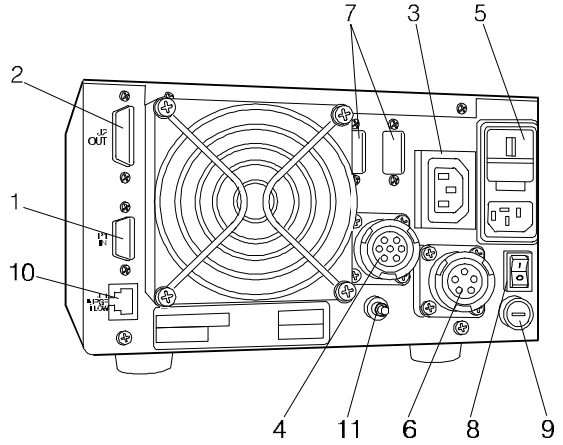


1. Logiikkasignaalien tulokytkentä (pariliittimet toimitetaan niihin sopivilla yhdyskaapelisulkijalla).
2. Logiikkasignaalien poistokytkentä ja pumpun sähkövirran ja herätetaajuuden tarkistus.
3. Tehon ulostulopistoke (120 Vac, 1 A) lisälaitteiden sähkönsyöttöä varten (tuuletuslaite, primääripumpun käynnistysrele, jne.).
4. Pumpun kaapelin liitin.
5. Valvojan sähkövirran tulomoduuli. Käsittää suojasulakkeen, jännitteenmuuntajan, sähkövoiman pistorasian ja EMC suodattimen.
6. Kuumennusvaipan sähkökaapelin liitin.
7. Tila, joka on tarkoitettu viestintäportin sarjakytkennälle RS-232 - RS-422 - RS-485 (toimitetaan lisävarusteena).
8. Virtakatkaisin.
9. Kuumennusvaipan sähkösulake.
10. Kytkentäkaapelin ja virtausmittarin välinen liitin.
11. Maadoitusliitäntä.

*Valvojien 969-9433 ja 969-9533 takapaneeli*

## KÄYTTÖTOIMENPITEET

### *Valvojan käynnistys*

Valvoja käynnistyy asetettaessa virtakaapeli pistorasiaan ja käännettäessä pääkatkaisin asentoon 1.

### *Pumpun käynnistys*

Pumppu käynnistyy painettaessa START-painonappia.

### *Pumpun pysäyttäminen*

Pumppu pysähtyy painettaessa etupaneelissa olevaa STOP-painonappia.

## HUOLTO

Turbo-V 300 ICE -sarjan valvojia ei tarvitse huoltaa millään tavoin. Mahdolliset valvojaan tehtävät toimenpiteet tulee jättää aina valtuutetun henkilön tehtäviksi.

Toimintahäiriön sattuessa on mahdollista käyttää Varianin korjauspalvelua tai "Varian advance exchange service" -palvelua, jolloin on mahdollista vaihtaa rikkoontunut valvoja ladattuun valvojaan.

**VAARA!**

Ennen minkä tahansa valvojaan tehtävän toimenpiteen suorittamista irrottakaa sähkökaapeli pistorasiasta.

Mikäli valvoja täytyy romuttaa, toimikaa sen hävittämisessä kansallisten säädösten ja normien määräämällä tavalla.

## VIANETSINTÄ

Joidenkin toimintahäiriöiden yhteydessä valvojan itsemäärittelypiiri analysoi virheen, joka näkyy viesteinä, jotka on kuvailtu seuraavassa taulukossa.

| VIESTI | VIKA | KORJAUSTOIMENPITEET |
|---|---|---|
| **CHECK CONNECTION TO PUMP** | Toimintahäiriö pumpun ja valvojan liitännässä. | Tarkistakaa, että pumpun ja valvojan välinen yhteyskaapeli on hyvin kiinnitetty päistään ja ettei siinä ole esteitä.<br>Painakaa kaksi kertaa START-painonappia, jolloin pumppu käynnistyy. |
| **PUMP WAITING INTERLOCK** | Lukitussignaali (interlock) liittimessä P1 on aktiivinen johtuen liittimen J1 neulojen 3 ja 8 välillä tapahtuneen oikosulun keskeytyksestä tai ulkoisen lukitussignaalin (interlock) avautumisesta. | Palauttakaa liittimen J1 neulojen 3 ja 8 välinen oikosulku tai sulkekaa ulkopuolinen lukitussignaali (interlock). |
| **FAULT: PUMP OVERTEMP.** | Pumpun ylä-/alalaakerin lämpötila on ylittänyt 60 °C:tta. | Odottakaa, että lämpötila palaa kynnysarvon alapuolelle.<br>Painakaa START-painonappia kaksi kertaa, jolloin pumppu käynnistyy. |
| **FAULT: CONTROLLER OVERTEMPERATURE** | Valvojan muuntajan lämpötila on ylittänyt 90 °C:tta. | Odottakaa, että lämpötila palaa kynnysarvon alapuolelle.<br>Painakaa START-painonappia kaksi kertaa, jolloin pumppu käynnistyy. |
| **FAULT: TOO HIGH LOAD** | Normaalityöskentelyn aikana (käynnistysvaiheen jälkeen) pumpun kuluttama sähkövirta on suurempi kuin sille on ohjelmoitu (3 A). | Tarkistakaa, että pumpun roottori pyörii vapaasti. Painakaa START-painonappia kaksi kertaa, jolloin pumppu käynnistyy. |
| **FAULT: SHORT CIRCUIT** | Normaalityöskentelyn aikana (käynnistysvaiheen jälkeen) poistoliitin on oikosulussa (ulostulovirta suurempi kuin 6 A). | Tarkistakaa pumpun ja valvojan välinen liitos.<br>Painakaa START-painonappia kaksi kertaa, jolloin pumppu käynnistyy. |
| **OVERVOLTAGE** | Valvojan sähköosastossa on jokin vika tai se on ottanut vastaan häiriösignaalin. | Painakaa START-painonappia kaksi kertaa, jolloin pumppu käynnistyy.<br>Jos viesti ilmaantuu uudelleen, ottakaa yhteys Varianiin huoltoa varten. |
| **FLOW METER ALARM** | Puhdistusvirtaukseen liittyvä hälytys. Virtausarvo on jäänyt asetettua kynnysarvoa alhaisemmaksi vähintään 10 sekunnin ajaksi. | Tarkista kaasun syöttöpiirin asianmukainen toiminta. |

## ΓΕΝΙΚΕΣ ΠΛΗΡΟΦΟΡΙΕΣ

Αυτή η συσκευή προορίζεται για επαγγελματική χρήση. Ο χρήστης θα πρέπει να διαβάσει προσεκτικά τις οδηγίες του παρώντος εγχειριδίου και οποιαδήποτε άλλη πρόσθετη πληροφορία που παρέχεται από τη Varian, πριν από τη χρησιμοποίηση της συσκευής. Η Varian δεν φέρει καμία ευθύνη όσον αφορά την ολική ή μερική αθέτηση των οδηγιών, την ακατάλληλη χρήση εκ μέρους ανεκπαίδευτου προσωπικού, αυθαίρετες επεμβάσεις ή χρήση που δεν συμφωνεί με τις ειδικές εθνικές διατάξεις. Οι ρυθμιστές της σειράς Turbo-V 300 ICE είναι μετατροπείς συχνότητας, ελεγχόμενοι από έναν μικροεπεξεργαστή. Είναι κατασκευασμένοι με εξαρτήματα σε στερεά κατάσταση και έχουν αυτοδιαγνωστική και αυτοπροστατευτική ικανότητα.
Οι ρυθμιστές οδηγούν τις αντλίες της σειράς Turbo-V 300 ICE (με μια διαδικασία που διαιρείται σε δέκα στάδια) κατά τη διάρκεια εκκίνησης ελέγχοντας την τάση και το ηλεκτρικό ρεύμα σε σχέση με την ταχύτητα στην οποία θα φτάσει η αντλία. Αυτοί έχουν ενσωματωμένα όλα τα απαραίτητα κυκλώματα για την αυτόματη λειτουργία των αντλιών της σειράς Turbo-V 300 ICE. Διαμέσου βοηθητικών συνδετήρων διατίθονται οι εντολές για την εκκίνηση και τη στάση της αντλίας εξ'αποστάσεως,
τα σήματα που δείχνουν την κατάσταση λειτουργίας της αντλίας, οι χειρισμοί εκκίνησης και σταματήματος της αντλίας προ - κενού, τα σήματα μπλοκαρίσματος (για διακόπτες πίεσης, διακόπτες ελέγχου της ροής του νερού, κλπ.), τα σήματα ελέγχου του θερμαντικού ιμάντα (heater jacket), τα σήματα ελέγχου του μετρητή ροής και αυτά για τη διαχείριση της βαλβίδας καθαριότητας (purge valve).
Στις επόμενες παραγράφους αναφέρονται όλες οι απαραίτητες πληροφορίες που εγγυούνται την ασφάλεια του χειριστή κατά τη διάρκεια της χρησιμοποίησης της συσκευής. Λεπτομερείς πληροφορίες παρέχονται στο παράρτημα "Technical Information".
Αυτό το εγχειρίδιο χρησιμοποιεί τις ακόλουθες συμβάσεις:

**ΚΙΝΔΥΝΟΣ**

Οι ενδείξεις κινδύνου προσελκύουν την προσοχή του χειριστή σε μια διαδικασία ή σε μια ειδική εργασία η οποία εάν δεν εκτελεστεί σωστά, θα μπορούσε να προκαλέσει σοβαρές προσωπικές βλάβες.

**ΠΡΟΣΟΧΗ**

Οι ενδείξεις προσοχής εμφανίζονται πριν από τις διαδικασίες οι οποίες εάν δεν εκτελεστούν με προσοχή, θα μπορούσαν να προκαλέσουν ζημιές στη συσκευή.

*ΣΗΜΕΙΩΣΗ*

*Οι σημειώσεις περιέχουν σημαντικές πληροφορίες που έχουν αποσπαστεί από το κείμενο.*

## ΑΠΟΘΗΚΕΥΣΗ

Κατά τη διάρκεια της μεταφοράς και της αποθήκευσης των ρυθμιστών πρέπει να τηρούνται οι ακόλουθες περιβαλλοντικές συνθήκες:

- θερμοκρασία: -20 °C ως + 70 °C
- σχετική υγρασία· 0 - 95% (ασυμπύκνωτη)

## ΠΡΟΕΤΟΙΜΑΣΙΑ ΓΙΑ ΤΗΝ ΕΓΚΑΤΑΣΤΑΣΗ

Ο ρυθμιστής είναι εξοπλισμένος με μία ευρύχωρη προστατευτική συσκευασία. Αν υπάρχουν ενδείξεις βλάβης που θα μπορούσαν να έχουν προκληθεί κατά τη διάρκεια της μεταφοράς, συμβουλευτείτε το τοπικό τμήμα πωλήσεων.
Κατά τη διάρκεια του ανοίγματος της συσκευασίας, δώστε ιδιαίτερη προσοχή έτσι ώστε να μην πέσει και να μην χτυπηθεί ο ρυθμιστής.
Μην εγκαταλείπετε τη συσκευασία στο περιβάλλον. Το υλικό ανακυκλώνεται πλήρως και ανταποκρίνεται στην Οδηγία της Ε.Ο.Κ. 85/399 για τη διαφύλαξη του περιβάλλοντος.

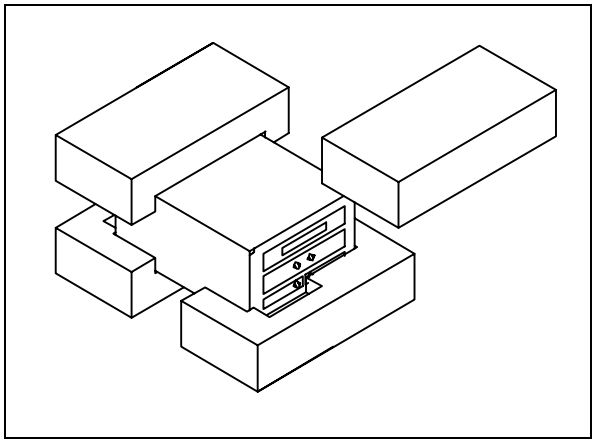

*Συσκευασία των ρυθμιστών*

Κάθε ρυθμιστής βγαίνοντας από την Varian έχει μία συγκεκριμένη τάση τροφοδότησης:

- το μοντέλο 969-9433 220 Vac
- το μοντέλο 969-9533 120 Vac

Ελέγξτε αν επιλέχθηκε η σωστή τάση και συνδέστε το καλώδιο τροφοδότησης.

## ΕΓΚΑΤΑΣΤΑΣΗ

**ΚΙΝΔΥΝΟΣ**

Ο ρυθμιστής είναι εφοδιασμένος με τριπολικό καλώδιο τροφοδότησης με μία πρίζα που έχει εγκριθεί διεθνώς. Να χρησιμοποιείτε πάντα αυτό το καλώδιο τροφοδοσίας και να το βάζετε σε πρίζα που να διαθέτει την κατάλληλη γείωση έτσι ώστε να αποφεύγονται ηλεκτρικές εκκενώσεις.
Στο εσωτερικό του ρυθμιστή αναπτύσσονται υψηλές τάσεις που μπορούν να προκαλέσουν σοβαρούς τραυματισμούς ή και το θάνατο. Πριν εκτελέσετε οποιαδήποτε εργασία εγκατάστασης ή συντήρησης του ρυθμιστή αποσυνδέστε τον από την πρίζα τροφοδότησης.

*ΣΗΜΕΙΩΣΗ*

*Ο ρυθμιστής μπορεί να τοποθετηθεί επάνω σε ένα τραπέζι ή στο εσωτερικό μίας κατάλληλης θήκης. Σε οποιαδήποτε περίπτωση είναι αναγκαίο ο αέρας να κυκλοφορεί ελεύθερα στο εσωτερικό της συσκευής.*
*Μην τοποθετείτε, ούτε να χρησιμοποιείτε τον ρυθμιστή σε χώρους εκτεθειμένους στις καιρικές συνθήκες (βροχή, πάγο, χιόνι, σκόνες, αέρια, σε χώρους όπου υπάρχει κίνδυνος έκρηξης ή πυρκαγιάς).*

Κατά τη διάρκεια της λειτουργίας πρέπει να τηρούνται οι ακόλουθες περιβαλλοντικές συνθήκες:

- θερμοκρασία: 0 °C - + 40 °C
- σχετική υγρασία: 0 - 95 % (ασυμπύκνωτη).

Για τη σύνδεση του ρυθμιστή με την αντλία χρησιμοποιήστε το αντίστοιχο καλώδιο του ρυθμιστή.

Για τις άλλες συνδέσεις και για την εγκατάσταση των επιπλέον εξαρτημάτων, βλέπε το παράρτημα ""Technical Information".

## ΧΡΗΣΗ

Σ' αυτήν την παράγραφο αναφέρονται οι κυριότερες διαδικασίες λειτουργίας. Για περισσότερες λεπτομέρειες και για διαδικασίες που απαιτούν ιδιαίτερες συνδέσεις ή αξεσουάρ, αναφερθείτε στην παράγραφο Χρήσης του παραρτήματος "Τεχνικές Πληροφορίες".Πριν χρησιμοποιήσετε τον ρυθμιστή κάντε όλες τις συνδέσεις ηλεκτρικές και αέρος με βάση το εγχειρίδιο της αντλίας σύνδεσης.

**ΚΙΝΔΥΝΟΣ**

Για να αποφύγετε βλάβες σε άτομα ή στη συσκευή, όταν η αντλία είναι τοποθετημένη σε ένα τραπέζι σιγουρευτείτε ότι είναι καλά σταθεροποιημένη. Μην θέτετε σε λειτουργία την αντλία αν η φλάντζα εισόδου δεν είναι συνδεδεμένη στο σύστημα ή αν δεν είναι κλειστή με την φλάντζα κλεισίματος.

*ΣΗΜΕΙΩΣΗ*

*Ο συνδετήρας J1 θα πρέπει να αφεθεί συνδεδεμένος με τη γέφυρα αν δεν γίνεται καμμία εξωτερική σύνδεση. Η αντλία προ - κενού και η αντλία Turbo-V μπορούν να ενεργοποιηθούν προσωρινά.*

### *Χειριστήρια, ενδείξεις και συνδετήρες του Ρυθμιστή*

Στη συνέχεια παρουσιάζονται ο πίνακας ελέγχου του ρυθμιστή και οι πίνακες σύνδεσης. Για περισσότερες λεπτομέρειες αναφερθείτε στο παράρτημα "Technical Information".

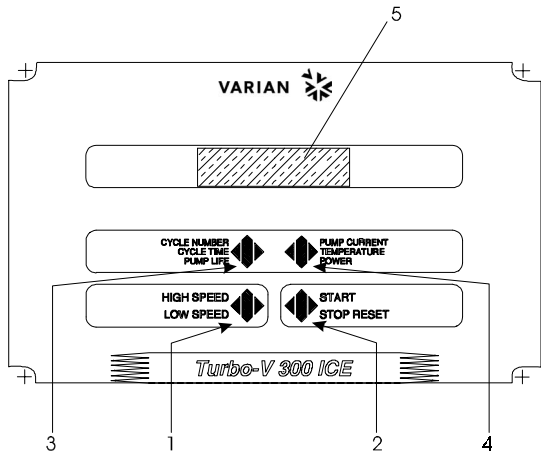


1 . Κουμπί για την επιλογή του HIGH/LOW SPEED. Ενεργοποιείται μόνον όταν έχει επιλεγεί η λειτουργία στον μπροστινό πίνακα. Πατώντας το επανειλημμένα, περνάτε εκ περιτροπής από HIGH SPEED σε LOW SPEED.
2 . Κουμπί για τους χειρισμούς START, STOP και RESET. Είναι ενεργό μόνον όταν έχει επιλεγεί η λειτουργία στον μπροστινό πίνακα. Πατώντας το μία φορά ενεργοποιείται η φάση εκκίνησης. Πατώντα το ακόμα μία φορά σταματά η αντλία. Αν η αντλία σταμάτησε αυτόματα λόγω βλάβης θα πρέπει να πατηθεί αυτό το κουμπί μία φορά έτσι ώστε να γίνει η επαναρύθμιση του ρυθμιστή και μία δεύτερη φορά για να ενεργοποιηθεί η αντλία.
3 . Κουμπί για να εμφανιστούν στην οθόνη οι παράμετροι cycle number, cycle time και. pump life
4 . Κουμπί για την εμφάνιση στην οθόνη των παράμετρων pump current, pump temperature, pump power rotational speed, διαπιστωμένη τιμή της ροής, είδος αερίου και κατάσταση του συναγερμού. Είναι πάντα ενεργοποιημένο άσχετα με τη λειτουργία που θα επιλεγεί. Πατώντας μαζί τα κουμπιά 3 και 4 για τουλάχιστον 2 δευτερόλεπτα ενεργοποιείται ένα πρόγραμμα με το οποίο μπορείτε να προγραμματίσετε μερικές λειτουργικές παραμέτρους
5 . Αλφαριθμητική οθόνη με υγρούς κρυστάλλους: μήτρα κουκίδων, 2 σειρές x 16 χαρακτήρες.

*Μπροστά πίνακας του Ρυθμιστή (Controller)*
*969-9433 και 969-9533*

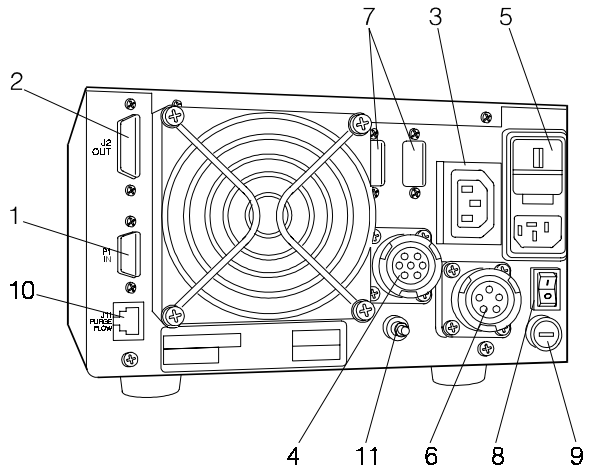


1. Συνδετήρας εισόδου λογικών σημάτων (το ζευγάρι του συνδετήρα προμηθεύεται με την κατάλληλη γέφυρα κλεισίματος).
2. Συνδετήρας εξόδου των λογικών σημάτων και ελέγχου του ρεύματος της αντλίας.
3. Πρίζα εξόδου ισχύος (120 Vac, 1 A) για την τροφοδότηση των προαιρετικών διατάξεων (vent device, ρελέ ενεργοποίησης της κύριας αντλίας, κ.τ.λ.).
4. Συνδετήρας καλωδίου αντλίας.
5. Ενότητα εισόδου τροφοδότησης για τον Ρυθμιστή. Περιλαμβάνει την ασφάλεια προστασίας, τον μετατροπέα τάσης, την τροφοδοσία ισχύος και το φίλτρο EMC.
6. Συνδετήρας για καλώδιο τροφοδότησης heater jacket.
7. Υποδοχή για το συνδετήρα εισόδου της σειριακής επικοινωνίας RS-232 - RS-422 - RS- 485 (προμηθεύεται ως επιπλέον εξοπλισμός).
8. Διακόπτης γραμμής.
9. Ασφάλεια για την τροφοδότηση heater jacket.
10. Συνδετήρας για καλώδιο ένωσης στο μετρητή ροής (flow meter).
11. Σύνδεση γείωσης.

*Εμπρόσθιος πίνακας του Ρυθμιστη 969-9433 και 969-9533*

## ΔΙΑΔΙΚΑΣΙΕΣ ΣΧΕΤΙΚΑ ΜΕ ΤΗ ΧΡΗΣΗ

### *Αναμμα του Ρυθμιστή*

Για να ανάψει ο ρυθμιστής είναι αρκετό να βάλετε το καλώδιο τροφοδότησης στην πρίζα του δικτύου και θέτετε το διακόπτη της γραμμής στη θέση 1.

### *Εκκίνηση της Αντλίας*

Για να τεθεί σε κίνηση η αντλία θα πρέπει να πατήσετε το κουμπί **START** του εμπρόσθιου πίνακα.

### *Σταμάτημα της Αντλίας*

Για να σταματήσει η αντλία αρκεί να πατήσετε το κουμπί **STOP** του εμπρόσθιου πίνακα.

## ΣΥΝΤΗΡΗΣΗ

Οι ρυθμιστές της σειράς **Turbo-V 300 ICE** δεν απαιτούν καμία συντήρηση. Οποιαδήποτε επέμβαση θα πρέπει να πραγματοποιηθεί από εγκεκριμένο προσωπικό.

Σε περίπτωση βλάβης μπορείτε να χρησιμοποιήσετε την υπηρεσία επισκευών της **Varian** ή το"**Varian advance exchange service**", που σας δίνει τη δυνατότητα να έχετε έναν καθαρισμένο ρυθμιστή σε αντικατάσταση του χαλασμένου.

---

**ΚΙΝΔΥΝΟΣ**

Πριν κάνετε οποιαδήποτε επέμβαση στον Ρυθμιστή αποσυνδέστε το καλώδιο τροφοδότησης.

---

Για την καταστροφή του ρυθμιστή ακολουθήστε ότι αναφέρετε στους εθνικούς κανονισμούς.

## ΜΗΝΥΜΑΤΑ ΛΑΘΟΥΣ

Σε ορισμένες περιπτώσεις βλάβης τα κυκλώματα αυτοδιάγνωσης του ρυθμιστή παρουσιάζουν ορισμένα μηνύματα λάθους τα οποία παρουσιάζονται στον πίνακα που ακολουθεί.

| ΜΗΝΥΜΑ | ΠΕΡΙΓΡΑΦΗ | ΔΙΟΡΘΩΣΗ |
|---|---|---|
| **CHECK CONNECTION TO PUMP** | Κακή λειτουργία στη σύνδεση αντλίας και ρυθμιστή | Ελέγξτε αν το καλώδιο σύνδεσης μεταξύ αντλίας και ρυθμιστή είναι καλά σταθεροποιημένο και στα δύο άκρα και ότι δεν υπάρχει διακοπή. Πατήστε δύο φορές το κουμπί START για να θέσετε ξανά σε κίνηση την αντλία. |
| **PUMP WAITING INTERLOCK** | Εχει ενεργοποιηθεί το σήμα interlock που βρίσκεται στον συνδετήρα P1 λόγω διακοπής του βραχυκυκλώματος μεταξύ του πιν 3 και του πιν 8 του συνδετήρα J1, ή λόγω ανοίγματος του σήματος του εξωτερικού interlock. | Επαναφέρατε το βραχυκύκλωμα μεταξύ του πιν 3 και του πιν 8 του συνδετήρα J1, , κλείστε το σήμα του εξωτερικού interlock. |
| **FAULT: PUMP OVERTEMP.** | Η θερμοκρασία του άνω κουζινέτου της αντλίας ξεπέρασε τους 60 °C. | Περιμένετε ώσπου η θερμοκρασία να κατεβεί κάτω από το ανώτατο επιτρεπτό σημείο.<br>Πατήστε δύο φορές το κουμπί START για να θέσετε ξανά σε κίνηση την αντλία. |
| **FAULT: CONTROLLER OVERTEMPERATURE** | Η θερμοκρασία του μετασχηματιστή ξεπέρασε τους 90 °C. | Περιμένετε ώσπου η θερμοκρασία να κατεβεί κάτω από το ανώτατο επιτρεπτό σημείο.<br>Πατήστε δύο φορές το κουμπί START για να θέσετε ξανά σε κίνηση την αντλία. |
| **FAULT: TOO HIGH LOAD** | Κατά την κανονική λειτουργία (μετά τη φάση εκκίνησης) το απορροφούμενο ρεύμα από την αντλία είναι μεγαλύτερο από το προγραμματισμένο (3 A). | Ελέγξτε αν ο ρότορας της αντλίας μπορεί να περιστραφεί ελεύθερα.<br>Πατήστε δύο φορές το κουμπί START για να θέσετε ξανά σε κίνηση την αντλία. |
| **FAULT: SHORT CIRCUIT** | Κατά την κανονική λειτουργία (μετά τη φάση εκκίνησης) η σύνδεση εξόδου έχει βραχυκυκλώσει (ρεύμα εξόδου μεγαλύτερο από 6 A) | Ελέγξτε τις συνδέσεις μεταξύ αντλίας και ρυθμιστή.<br>Πατήστε δύο φορές το κουμπί START για να θέσετε ξανά σε κίνηση την αντλία. |
| **OVERVOLTAGE** | Πραγματοποιήθηκε μία βλάβη στο τμήμα τροφοδότησης του controller, ή ο controller έλαβε ένα μη αναγνωρίσιμο σήμα. | Πατήστε δύο φορές το κουμπί START για να θέσετε ξανά σε κίνηση την αντλία. Αν ξαναπαρουσιάζεται αυτό το μήνυμα αποταινθείτε στη Varian για τη συντήρηση. |
| **FLOW METER ALARM** | Συναγερμός σχετικός με τη ροή ακαθαρσίας. Η τιμή της ροής παρέμεινε σε μία τιμή κατώτερη από το όριο που είχε τεθεί, για ένα χρόνο ίσο ή μεγαλύτερο από 10 δευτερόλεπτα. | Ελέγχετε τη σωστή λειτουργία του κυκλώματος τροφοδότησης του αερίου. |

## GENERAL INFORMATION

This equipment is intended for use by professionals. The user should read this instruction manual and any other additional information supplied by Varian before operating the equipment. Varian will not be held responsible for any events occurring due to non-compliance, even partial, with these instructions, improper use by untrained people, non-authorized interference with the equipment or any action contrary to that provided for by specific national standards. The Turbo-V 300 ICE series controllers are microprocessor-controlled, solid-state, frequency converters with self-diagnostic and self-protection features.
The controllers drive (within ten steps) the Turbo-V 300 ICE pump during the starting phase by controlling the voltage and current respect to the speed reached by the pump. They incorporate all the facilities required for the automatic operation of the Turbo-V 300 ICE pump series.
Remote start/stop commands, pump status signals, forepump start/stop commands, interlock control signals (for pressure switch, water flow switch), heater jacket control signals, flow meter control signals and purge valve management signals are provided via auxiliary connectors. The following paragraphs contain all the information necessary to guarantee the safety of the operator when using the equipment. Detailed information is supplied in the appendix "Technical Information".

**This manual uses the following conventions:**

**WARNING!**

The warning messages are for attracting the attention of the operator to a particular procedure or practice which, if not followed correctly, could lead to serious injury.

**CAUTION!**

The caution messages are displayed before procedures which, if not followed, could cause damage to the equipment.

***NOTE***

*The notes contain important information taken from the text.*

## STORAGE

When transporting and storing the controllers, the following environmental requirements should be satisfied:

- temperature: from -20 °C to + 70 °C
- relative humidity: 0 - 95% (without condensation)

## PREPARATION FOR INSTALLATION

The controller is supplied in a special protective packing. If this shows signs of damage which may have occurred during transport, contact your local sales office. When unpacking the controller ensure that it is not dropped or subjected to any form of impact. Do not dispose of the packing materials in an unauthorized manner. The material is 100% recyclable and complies with EEC Directive 85/399.

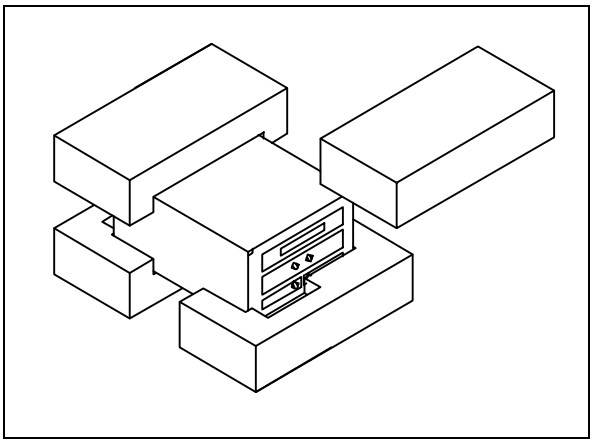

*Controllers packing*

Each controller is factory set for a specific power supply:

- model 969-9433 is factory set for 220 Vac operation
- model 969-9533 is factory set for 120 Vac operation

Check voltage selector window for correct set and connect power cord.

## INSTALLATION

**WARNING!**

The Turbo-V controller is equipped with a 3-wire power cord and plug (internationally approved) for user safety. Use this power cord and plug in conjunction with a properly grounded power socket to avoid electrical shock. High voltage developed in the controller can cause severe injury or death. Before servicing the unit, disconnect the input power cable.

***NOTE***

*The Turbo-V controller can be used as a bench unit or a rack module, but it must be positioned so that free air can flow through the holes.*
*Do not install or use the controller in an environment exposed to atmospheric agents (rain, snow, ice), dust, aggressive gases, or in explosive environments or those with a high fire risk.*

During operation, the following environmental conditions must be respected:

- temperature: from O °C to +40 °C;
- relative humidity: 0 - 95% (without condensation).

To connect the controller to the pump use the specific cable supplied with the controller.

See the appendix “Technical Information” for detailed Information about the above mentioned and the other connections, and about the options installation.

## USE

This paragraph describes the fundamental operating procedures. Detailed information and operating procedures that envolve optional connection or option are supplied in the paragraph “USE” of the appendix “Technical Information”. Make all vacuum manifold and electrical connections and refer to Turbo-V pump instruction manual before operating the Turbo-V controller.

**WARNING!**

To avoid injury to personnel and damage to the equipment, if the pump is laying on a table make sure it is steady. Never operate the Turbo-V pump if the pump inlet is not connected to the system or blanked off.

***NOTE***

*The input signal J1 connector should be left in position including the shipping links if no external connections are made. The forepump and Turbo-V pump can be switched on at the same time.*

### *Controller Controls, Indicators and Connectors*

The following paragraph illustrates the Controller control panel and interconnection panel.
More details are contained in the appendix “Technical Information".

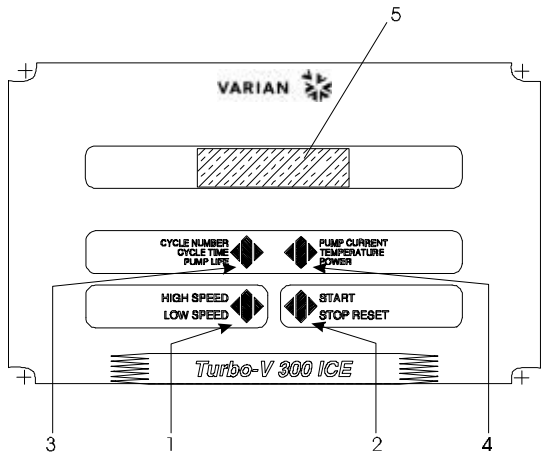


1. Keyboard push-button for HIGH/LOW SPEED mode selection. It is active only when the front panel operation has been selected. Pressed repeatedly, toggles between HIGH SPEED and LOW SPEED.
2. Keyboard push-button for START, STOP, RESET mode selection. It is active only when the front panel operation has been selected. By pressing once the starting phase begins; if pressed again it stops the pump. If the pump has been stopped automatically by a fault, this push-button must be pressed once to reset the controller and a second time to restart the pump.
3. Keyboard push-button to recall on the display the cycle number, cycle time and pumplife.
4. Keyboard push-button to recall on the display the pump current, pump temperature, pump power, rotational speed, flow value detected, type of gas and alarm status. It is always active regardless of the operating mode selected. Push-buttons 3 and 4, if pressed together for at least 2 seconds put the controller in a routine where it is possible to select some operation parameters.
5. LCD back-lighted alphanumeric display: dot matrix 2 lines x 16 characters.

*Controller 969-9433,*
*969-9533 front panel*

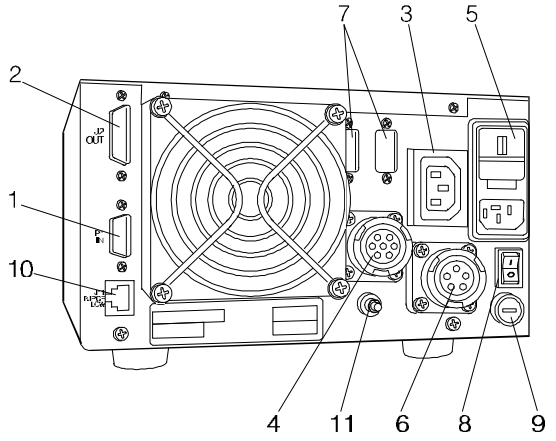


1. Logic input signals connectors (mating connector supplied with link).
2. Logic signals, pump current monitor and activation frequency output connector.
3. Power out socket (120 Vac, 1 A) for power supply to the optional devices (vent device, primary pump activation relay, etc).
4. Pump cable socket.
5. Controller power entry module consisting of mains fuses, voltage change over, mains socket and EMC filter.
6. Heater jacket power cord socket.
7. Provision for RS-232 - RS-422 - RS-485 communication port connector (provided as an option).
8. Power switch.
9. Heater jacket power supply fuse.
10. Flow meter connection cable socket.
11. Ground connection.

*Controller 969-9433 and 969-9533 rear panel*

## USE PROCEDURE

### *Controller Startup*

To startup the controller plug the power cable into a suitable power source and set the line switch to the position 1.

### *Starting the pump*

To start the pump press the START push-button on the controller front panel.

### *Pump Shutdown*

To shutdown the pump press the STOP push-button on the controller front panel.

## MAINTENANCE

The Turbo-V 300 ICE series controller does not require any maintenance. Any work performed on the controller must be carried out by authorized personnel.

When a fault has occurred it is possible to use the Varian repair service. Replacement controllers are available on an advance exchange basis through Varian.

**WARNING!**

Before carrying out any work on the controller, disconnect it from the supply.

If a pump is to be scrapped, it must be disposed off in accordance with the specific national standards.

## ERROR MESSAGES

For a certain type of failure, the controller will self-diagnose the error and the messages described in the following table are displayed.

| MESSAGE | DESCRIPTION | REPAIR ACTION |
|---|---|---|
| **CHECK CONNECTION TO PUMP** | Wrong connection between the pump and the controller. | Check connection between controller and pump.<br>Press the START push-button twice to start the pump. |
| **PUMP WAITING INTERLOCK** | The interlock signal of P1 connector is activated by an interruption of the link between pin 3 and 8 of J1 connector, or because the external interlock signal is open. | Reset the short circuit between pin 3 and pin 8 of J1 connector, or close the external interlock signal. |
| **FAULT: PUMP OVERTEMP.** | The pump upper bearing temperature exceeded 60 °C. | Wait until the temperature decrease below threshold value.<br>Press the START push-button twice to start the pump. |
| **FAULT: CONTROLLER OVERTEMPERATURE** | The controller transformer temperature exceeded 90 °C. | Wait until the temperature decrease below threshold value.<br>Press the START push-button twice to start the pump. |
| **FAULT: TOO HIGH L0AD** | In normal operation, the current drawn by the pump is higher than programmed (3 A) | Check that the pump rotor is free to rotate.<br>Press the START push-button twice to start the pump. |
| **FAULT: SHORT CIRCUIT** | In normal operation (after the starting phase) the output connection is shorted (output current higher than 6 A). | Check connections and shortages between pump and controller. Press the START push-button twice to start the pump. |
| **OVERVOLTAGE** | A failure has occurred in the controller power supply section, or the controller has received a spurious signal. | Press the START button twice to start the pump again. If the message is redisplayed, contact Varian for maintenance. |
| **FLOW METER ALARM** | Alarm relating to the purge flow. The flow value remained at less than the set threshold for 10 seconds or more. | Check the correct operation of the gas supply circuit. |

## TURBO-V 300 ICE CONTROLLER DESCRIPTION

The controller is available in two versions:

- Model 969-9433 (220 Vac, 50-60 Hz)
- Model 969-9533 (120 Vac, 50-60 Hz)

The models are provided with a front panel with an LCD alphanumeric display to indicate the operating conditions/parameters of the Turbo-V pump and a keyboard, and a rear panel with input/output connectors.
The following figure is a picture of the Turbo-V controllers. The controller is a solid-state frequency converter which is driven by a single chip microcomputer and is composed of:

- Power transformer
- Front panel display and keyboard
- Rear panel with input/output connectors
- PCB including: power supply and 3-phase output, analog and input/output section, microprocessor and digital section, display and keyboard circuits. The power supply converts the single phase (50-60 Hz) AC mains supply into a 3-phase, low voltage, medium frequency output which is required to power the Turbo-V pump.

The microcomputer generates the variable output frequency and controls the 3-phase output voltage according to the software and the gas load condition of the pump.
Moreover, it manages signals from sensors, input/output connection information to be displayed, and gives outputs for a fully automatic operation. The heater jacket and flow meter are also handled.
An EEPROM internal to the microprocessor is used to store pump operating parameters and the input/output programmed information.

The controller can be operated via:

- Front panel switches
- Remote signals via rear panel connectors
- RS 232/485/422 serial link (option).

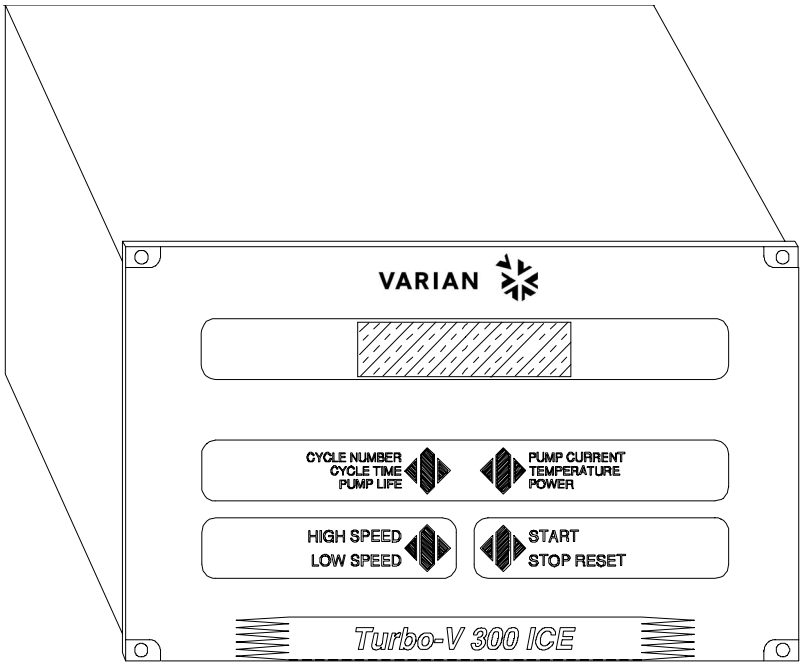


*Turbo-V 300 ICE controllers*

## CONTROLLER SPECIFICATIONS

| | |
|---|---|
| Input: | |
| Voltage | 100, 120, 220, 240 Vac, 1-phase |
| Frequency | 50 to 60 Hz |
| Power | 650 VA maximum |
| Output for pump: | |
| Voltage | 80 Vac nominal ±10% |
| Frequency | 933 Hz ±2% |
| Power | 250 W maximum |
| water cooling | 250 W |
| air cooling | 150 W |
| Operating temperature | 0 °C to +40 °C |
| Storage temperature | -20 °C to +70 °C |
| Fuse: | |
| • Mains | 2 x T3.15A(slow blow) for 220 or 240 input Voltage<br>2 x T6.3A(slow blow) for 100 or 120 input Voltage |
| • Heater Jacket (F4) | T3.15A (slow blow) |
| P1 optoisolator input | Minimum ON 3 mA Maximum 5mA |
| J2 optoisolator output | 24 Vdc, 60 mA |
| J7 output (fan, forepump coil, etc.) | 120 Vac, 1 A disregarding the mains |
| J11 purge flow connector | 12 Vdc power supply output |
| J12 heater jacket connector | 120 Vac 2A power supply output |
| In compliance with norms | EN 30011 class A group 1<br>EN 61010-1<br>IEC1000-4-2,1000-4-3, 1000-4-4 |
| Auxiliary connectors | |
| P1 | External INPUT signals (pins) |
| J2 | OUTPUT signals (sockets) |
| J7 | Output fan Voltage and Valve, forepump socket |
| J14, J13 | RS 232/422/485 connection (optional) |
| Interconnecting cables | Mains cable (3-wire, 3-meter long)<br>Pump cable (6-wire, 5-meter long) |
| Weight (both models) | 11.3 kg (24.9 lbs) |

## CONTROLLER OUTLINE

The outline dimensions for the Turbo-V 300 ICE controllers are shown in the following figures:

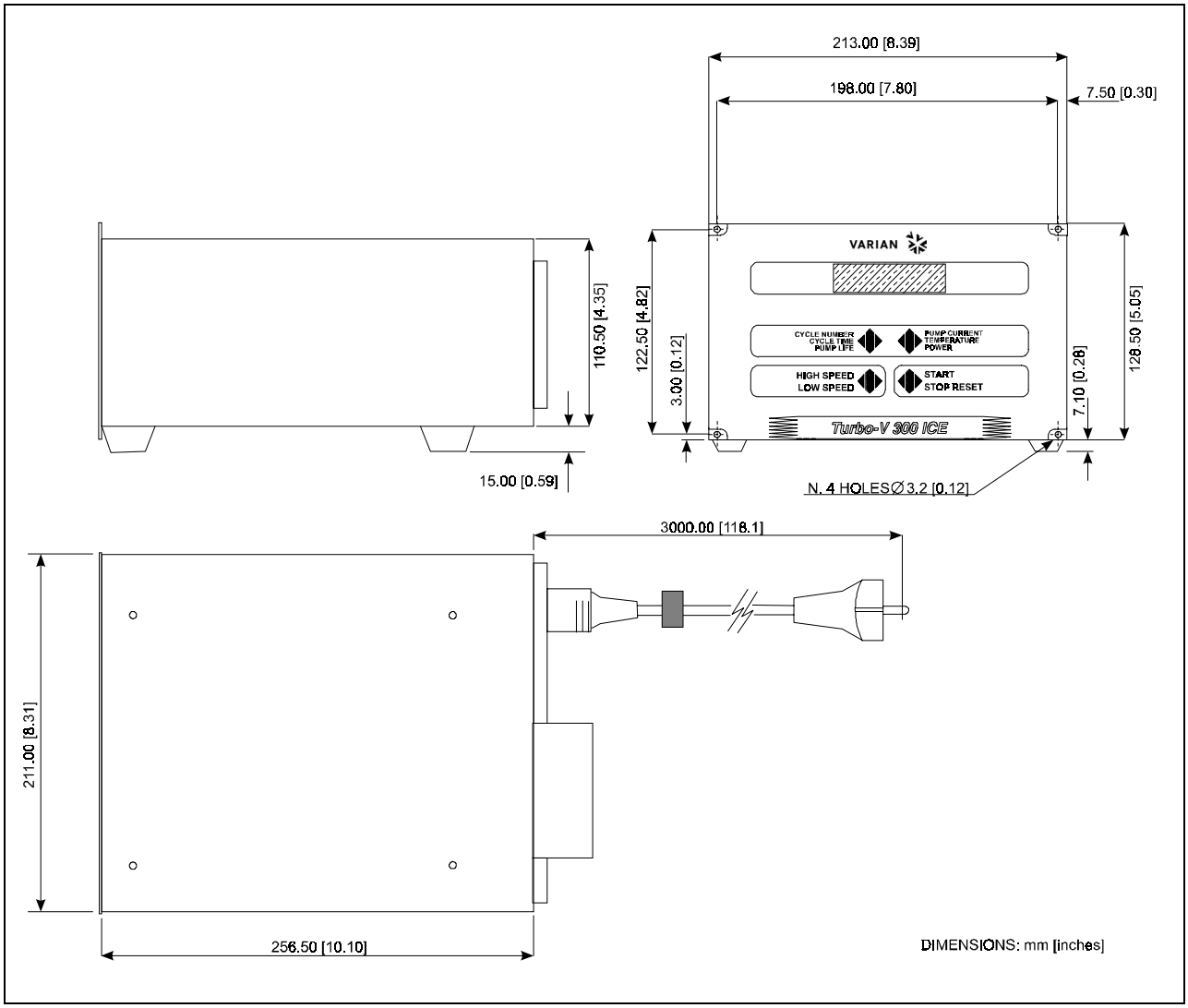


*Controller models 969-9433 and 969-9533 outline*

## FUSE HOLDER AND VOLTAGE CHANGER ASSEMBLY

The following figure shows the location of this assembly.

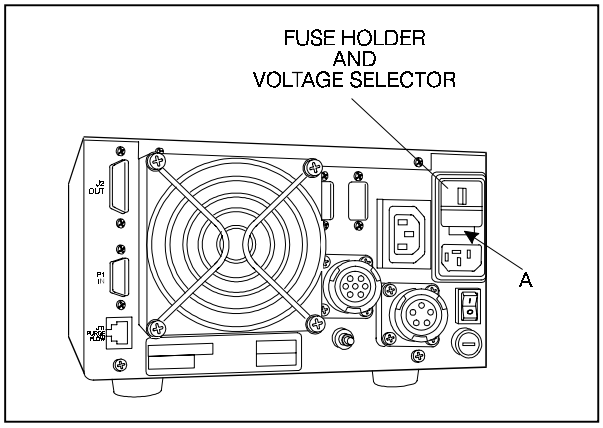


*Rear panel*

Proceed as follows to replace one or both fuses:

- Remove the assembly by levering in position **A** with a small screwdriver.
- Replace the fuse
  Use only T-type fuses of the following characteristics:
  - 100/120 Vac 3.15 A
  - 220/240 Vac 6.3 A

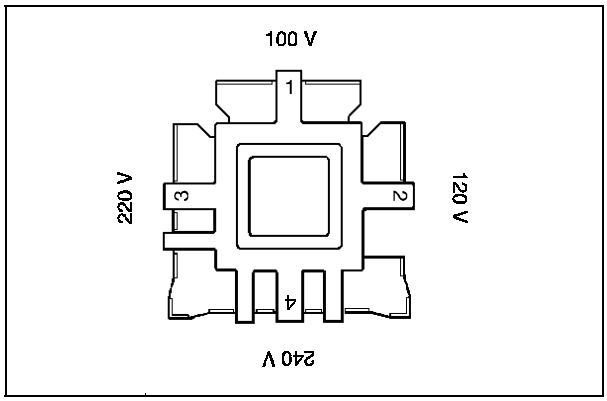


*Voltage Changer*

To change the power supply voltage rating after having removed the assembly as explained above, extract the voltage changer and then reposition it to view the desired voltage rating.

## INTERCONNECTIONS

The following figure shows the Controller interconnections.

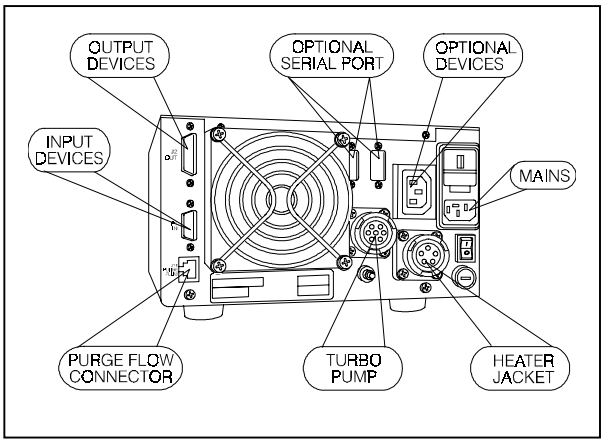


*Controller models 969-9433 and 969-9533 interconnection*

### *Connection P1 Logic Input Interconnections*

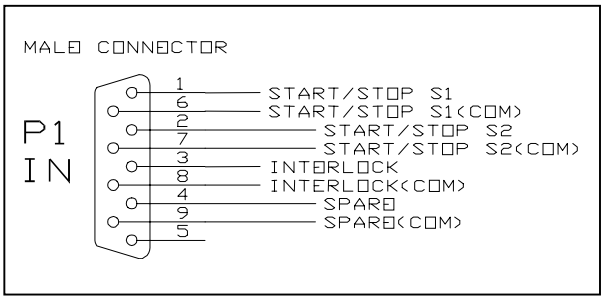


*P1 input connector*

All the logic input to the controller must be connected at J1 mating connector. With the provided J1 mating connector (shipped with pin 3 and pin 8 shorted) make the connections with AWG 24, (0.24 $mm^2$ ) or smaller wire to the pins indicated in the figure to obtain the desired capability. The following table describes the signals available on the connector.

| PIN | DESCRIPTION |
|---|---|
| 1-6 | Remote START/STOP S1 optically isolated from the internal circuit, requires a permanently closed contact (relay contact. transistor, etc.). When the contact closes the turbopump starts at high speed and when the contact opens, the turbopump is stopped. With the remote mode operation selected, the front panel push-button is inoperative. |
| 2-7 | Remote START/STOP S2 optically isolated from the internal circuit, requires a permanently closed contact (relay contact. transistor, etc.). When the contact closes the turbopump starts at low speed and when the contact opens, the turbopump is stopped. With the remote mode operation selected, the front panel push-button is inoperative. |
| 3-8 | INTERLOCK optically isolated from the internal circuit, this signal can be used to delay the starting of the turbopump. It requires a permanent closed contact before starting the turbopump. |
| 4-9 | SPARE. |

***NOTE***

*In the presence of both S1 and S2 signals, the one that reaches the processor first is executed.*

***NOTE***

*Pin 3-8 must be shorted to allow the Turbo-V 300 ICE pump to start if no interlock contact is connected. If after starting the pump, the interlock contact opens, it has no effect on the operation and the pump continues to turn.*

The following figure shows a typical contact logic input connection and the related simplified circuit of the controller.

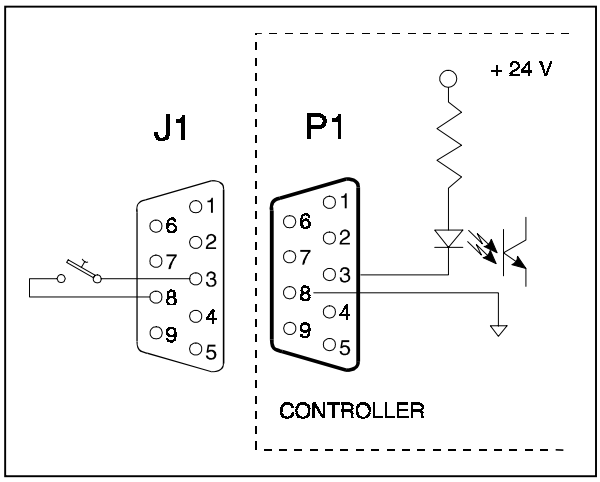


*Typical logic input connection*

### *Connection J2*
### *Logic Output Interconnections*

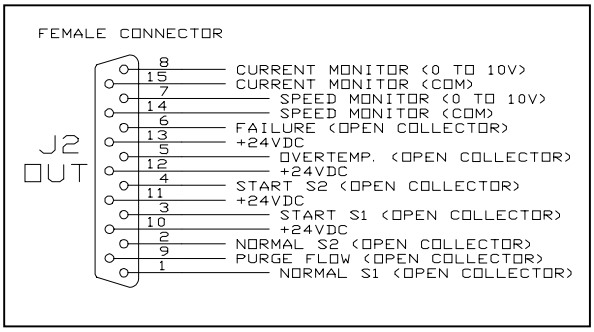


*Logic output connector*

All the logic output from the controller must be connected at P2 mating connector. With the optional P2 mating connector make the connection with AWG 24 (0.25 $mm^2$ ) or smaller wire to the pins indicated in the figure to obtain the desired capability. The following table describes the signals
available on the connector.

The following figure shows a typical logic output connection (relay coil) but any other device may be connected e.g. a LED, a computer, etc., and the related simplified circuit of the controller.

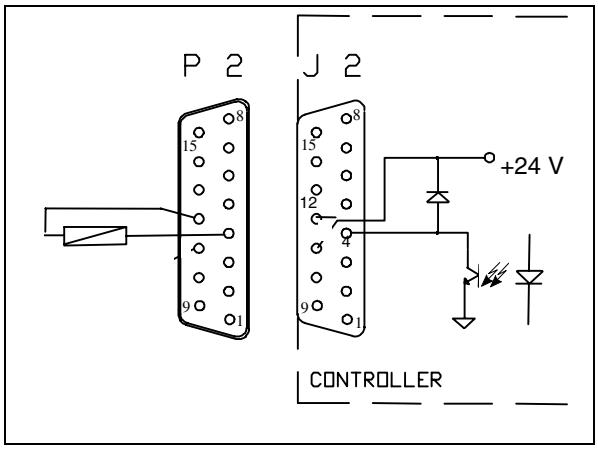


*Typical output connection open collector*

| PIN | DESCRIPTION |
|---|---|
| 1-10 * | Normal S1 signal 24 V 60 mA, optically isolated output (pin 10 positive, pin 1 negative). The output Voltage will be present when the rotational speed of the pump is higher than the selected high speed threshold. |
| 2-10 * | Normal S2 signal 24 V 60 mA, optically isolated output (pin 10 positive, pin 2 negative). The output Voltage will be present when the rotational speed of the pump is higher than the selected low speed threshold. |

➔

| PIN | DESCRIPTION |
|---|---|
| 3-11 * | START S1 signal 24 V, 60 mA, optically isolated output (pin 11 positive, pin 3 negative).<br>The output Voltage will be present when the START push-button on front panel is pressed or the remote start is present. or the function has been requested by RS 232/422/485, until NORMAL operation is reached. |
| 4-12 * | START S2 signal 24 V, 60 mA, optically isolated output (pin 12 positive, pin 4 negative).<br>The output Voltage will be present when the START push-button on front panel is pressed or the remote start is present. or the function has been requested by RS 232/422/485, until NORMAL operation is reached. |
| 5-13 * | OVERTEMP. signal 24 V, 60 mA, optically isolated output (pin 13 positive pin 5 negative).<br>The output Voltage will be present when a fault condition is displayed on the front panel display, with only in an overtemp condition |
| 6-13 * | FAULT signal 24 V, 60 mA, optically isolated output (pin 13 positive pin 6 negative).<br>The output Voltage will be present when a fault condition is displayed on the front panel display, with exception of an overtemp condition |
| 7-14 | Analog output voltage (0 - 10 V) of pump speed (pin 7 positive, pin 14 negative). |
| 8-15 | Analog output Voltage of DC current drawn by the turbopump (pin 8 positive, pin 15 negative). 2 Vdc proportional to 1A. |
| 9-10 * | Flow meter alarm, the flow value remained below the threshold for 10 seconds or more. |

* Open collector type contacts

### Connection J7
### Accessories and Options Interconnections

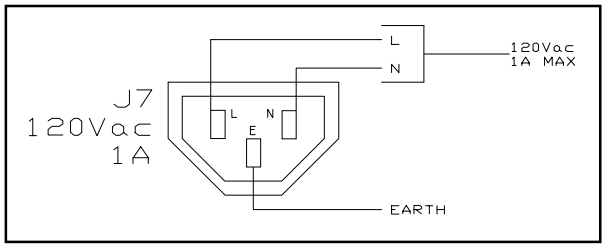


*J7 connectors*

**CAUTION!**

*The output voltage of the connector J7 is 120 Vac and the maximum current is 1A. Do not connect this plug to a device with a leakage current greater than 1.75 mA.*

The 120 Vac, 1 A maximum (independent of line Voltage) output Voltage is present when the main power switch is set to 1 position and after START push-button is pressed and will remain present until a fault condition is displayed on the front panel display or the turbopump is stopped.

The connector J7 is for vent device, forepump connector coils, pump cooling fan etc.

To make connections, remove the plug and wire the pins (maximum wire size 18 AWG, 1 $mm^2$) as indicated in the figure to obtain the desired capability.

**NOTE**

*Forepump relay coil is an independent user supplied item.*

### Connection J10
### Controller-to-Pump Connection

A five-meter long cable is provided to connect the controller to the pump. The following figures show the controller output connector configuration where pins:

- A-F = upper bearing sensor
- B-C-D = 80 Vac 3-phase output to pump motor stator
- E = ground

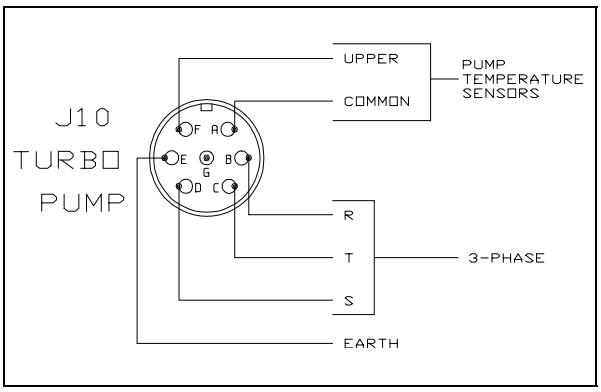


*Controller-to-pump connector*
*(applicable to model 969-9433 and 969-9533)*

### *Connector J11*
### *Purge Flow Meter Connector*

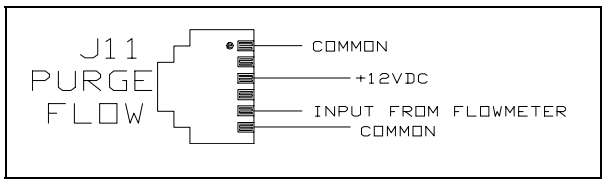


*J11 connectors*

| PIN | DESCRIPTION |
|---|---|
| 1-3 | Flow meter power supply: 12 Vdc, 10 mA, (pin 1 negative - pin 3 positive) |
| 5-6 | Analog signal with a voltage value proportional to the flow.<br>Between 0 and 3 V it is linearly proportional to between 0 and 100 sccm (pin 6 negative, pin 5 positive) |

**CAUTION!**

*Use this connector (J11) only with the Varian solid state flowmeter model 969-9114 or 969-9115. Any other connection could lead to serious injury.*

### *Connector J12*
### *Heater Jacket Connector*

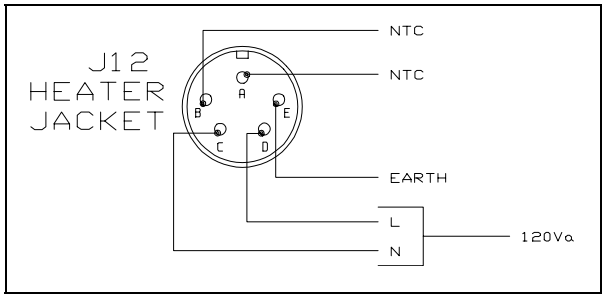


*J12 connectors*

- **A-B** heater jacket temperature sensor
- **C-D** 120 Vac 2 A, output to heater jacket
- **E** Ground (Earth)

**WARNING!**

*On the connector J12 is present an Hazardous voltage. Connect on the connector only the Varian Heating Jacket.*

## OPTIONAL SERIAL PORT

***NOTE***

*The Controller can be read when set in the Front/Remote mode, (read window only enabled), while it can be written to and read when set in the Serial mode (write window enabled).*

### *Serial Port Installation*

An optional RS 232/422/485 kit is available for both models. To install it, proceed as follows:

- Switch off the power and disconnect the power cord.
- Unscrew the cover screws and remove the cover.
- On rear panel, remove the connector plate, and then secure connectors J13 and J14 to the frame using the turrets provided.
- On rear panel, remove the fixing turrets of connectors **B** and **C** and then remove the controller.
- Attach the interface board connector to connector P6 on the controller and then secure it in place using screw **A** (3x6), which is not provided.
- Insert the flat cable through the rear panel and plug it into the socket **P1** located on the Interface board.
- Restore the main board into its original position.
- Install and tighten the connector screws and turrets.
- Replace the cover.

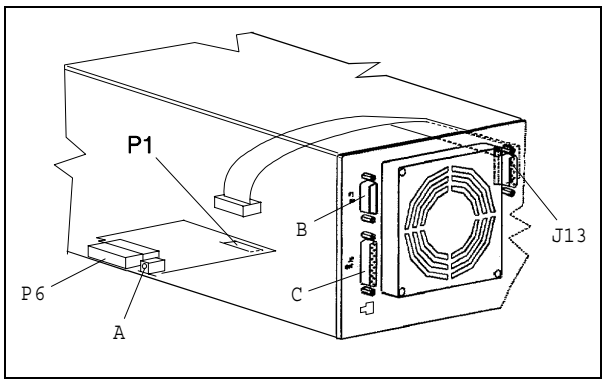


*Serial port connector installation*

### Serial Communication Port J13 and J14

Communication serial port connections and mini- mum connection configuration are shown in the following figures. The communication port mating connector is supplied with the RS 232 PCB (AMP/Cannon or equivalent 9-pin "D" type male connector). The external cable (not supplied) between the host computer and the controller does not require crossed wires so that signals are connected correctly.
For example, the Transmit data signal from controller (pin 2) must be connected to the host computer's Receive data line (pin 2) and vice versa. Consult the host computer's instruction manual for its serial port connections.

**NOTE**

*Varian cannot guarantee compliance with FCC regulations for radiated emissions unless all external wiring is shielded, with the shield being terminated to the metal shroud on the O-subconnector. The cable should be secured to the connector with screws.*

### RS 232-422 Communication Descriptions

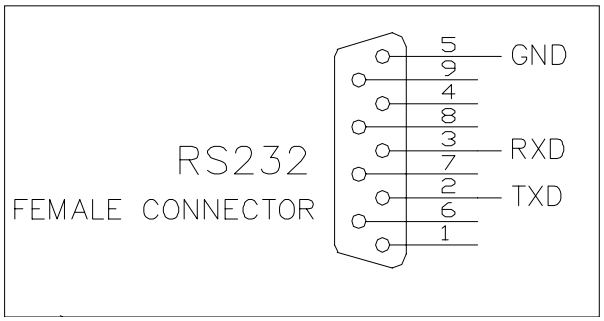


*Communication RS 232 serial port connections*

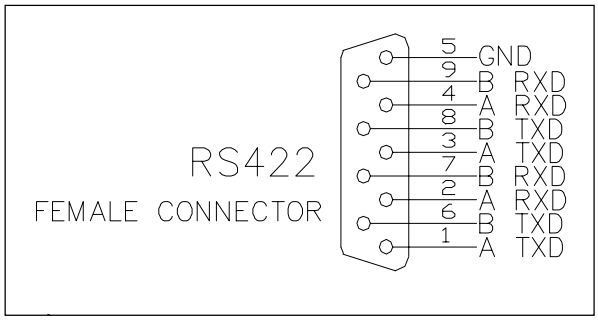


*Communication RS 422 serial port connections*

### Transmission Channel Characteristics

| | |
|---|---|
| levels: | RS232/RS422 |
| baud rate: | 9600/4800/2400/1200/600 programmable |
| character length: | 8 bits |
| parity: | none |
| stop bit: | 1 bit |
| protocoll: | master (PC) / slave (converter) |

In this case the value to be assigned to the ADDRESS field must be 80 hex (for RS 232 and 422 only).

### RS 485 Communication Description

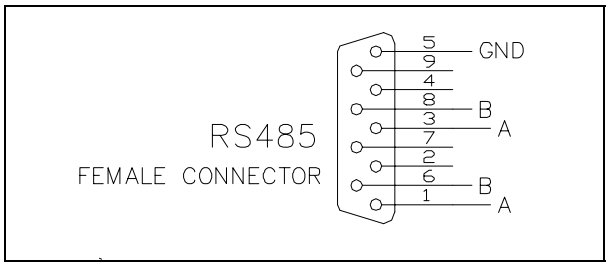


*Communication RS 485 serial port connections*

### Transmission Channel Characteristics

| | |
|---|---|
| levels: | RS 485 |
| baud rate: | 9600/4800/2400/1200/600 programmable |
| character length: | 8 bits |
| parity: | none |
| stop bit: | 1 bit |
| protocoll: | master (PC) / slave (converter) |
| max. devices: | 32 |

### Message Structure

(request and answer have the same format)

The master system (PC) starts every session sending the following message to the slave units connected:

<STX> / <ADDR> + <WINDOW> + <COMMAND> + <DATA> + <ETX> + <CRC>

where:

<STX>= 0x02

<ADDR> = 0x80 (for RS 232 and RS 422 only)

<ADDR> = 0x80 + device number (0...31)
0xFF: brodcasting command (recognized by all the devices, it doesn't implicate any answer) (for RS 485 only)

<WINDOWS>= ' 000 '...' 999' window number the meaning of the window depends to the device type

<COMMAND>= 0x30: window value reading
0x31: window writing

<DATA> = alphanumeric ASCII string containing, in the case of writing operation,the parameter to input into the window addressed by the field <WINDOW>This field may have variable length according to the data type contained in the window where you are working in. In the case of reading request of a window, the data field doesn't exist.

<ETX>= 0x03

<CRC>= XOR among all the characters following <STX>=(with exception of <STX>), including the end character <ETX> hexadecimally encoded by two ASCII characters.

When a slave device is addressed by the master:

1) In case of reading request of the value contained in a window, the slave answers a string equal to the one sent by the master but in addition there is the field <DATA> containing the value of the window. The format of the field <DATA> depends to the window type.

   The different types are:

| | **Length** | **Characters Permitted** |
|---|---|---|
| Logic (L) | 1 | '0'=OFF<br>'1'=ON |
| Numeric (N) | 6 | '0'...'9'<br>(Justifield to the right with '0') |
| Alphanumeric (A) | max 10 | ' '...' _ ' |

**EXAMPLES:**

Command : START
Source : PC
Destination : Inverter

| 02 | 80 | 30 | 30 | 30 | 31 | 31 | 03 | 42 | 33 |
|---|---|---|---|---|---|---|---|---|---|
| STX | ADDR | WINDOW | | | WR | ON | ETX | CRC | |

Source : Inverter
Destination : PC

| 02 | 80 | 06 | 03 | 38 | 35 |
|---|---|---|---|---|---|
| STX | ADDR | ACK | ETX | CRC | |

Command : STOP
Source : PC
Destination : Inverter

| 02 | 80 | 30 | 30 | 30 | 31 | 30 | 03 | 42 | 32 |
|---|---|---|---|---|---|---|---|---|---|
| STX | ADDR | WINDOW | | | WR | OF F | ETX | CRC | |

Source : Inverter
Destination : PC

| 02 | 80 | 06 | 03 | 38 | 35 |
|---|---|---|---|---|---|
| STX | ADDR | ACK | ETX | CRC | |

Command : SOFT-START (ON)
Source : PC
Destination : Inverter

| 02 | 80 | 31 | 30 | 30 | 31 | 31 | 03 | 42 | 32 |
|---|---|---|---|---|---|---|---|---|---|
| STX | ADDR | WINDOW | | | WR | ON | ETX | CRC | |

Source : Inverter
Destination : PC

| 02 | 80 | 06 | 03 | 38 | 35 |
|---|---|---|---|---|---|
| STX | ADDR | ACK | ETX | CRC | |

Command : SOFT-START (OFF)
Source : PC
Destination : Inverter

| 02 | 80 | 31 | 30 | 30 | 31 | 30 | 03 | 42 | 33 |
|---|---|---|---|---|---|---|---|---|---|
| STX | ADDR | WINDOW | | | WR | OF F | ETX | CRC | |

Source : Inverter
Destination : PC

| 02 | 80 | 06 | 03 | 38 | 35 |
|---|---|---|---|---|---|
| STX | ADDR | ACK | ETX | CRC | |

Command : LOW SPEED (ON)
Source : PC
Destination : Inverter

| | | | | | | | | | |
|---|---|---|---|---|---|---|---|---|---|
| 02 | 80 | 30 | 30 | 31 | 31 | 31 | 03 | 42 | 32 |
| STX | ADDR | WINDOW | | | WR | ON | ETX | CRC | |

Source : Inverter
Destination : PC

| | | | | | |
|---|---|---|---|---|---|
| 02 | 80 | 06 | 03 | 38 | 35 |
| STX | ADDR | ACK | ETX | CRC | |

Command : LOW SPEED (OFF)
Source : PC
Destination : Inverter

| | | | | | | | | | |
|---|---|---|---|---|---|---|---|---|---|
| 02 | 80 | 30 | 30 | 31 | 31 | 30 | 03 | 42 | 33 |
| STX | ADDR | WINDOW | | | WR | OF F | ETX | CRC | |

Source : Inverter
Destination : PC

| | | | | | |
|---|---|---|---|---|---|
| 02 | 80 | 06 | 03 | 38 | 35 |
| STX | ADDR | ACK | ETX | CRC | |

Command : CURRENT
Source : PC
Destination : Inverter

| | | | | | | | | |
|---|---|---|---|---|---|---|---|---|
| 02 | 80 | 32 | 30 | 30 | 30 | 03 | 38 | 31 |
| STX | ADDR | WINDOW | | | RD | ETX | CRC | |

Source : Inverter
Destination : PC

| | | | | | | | | | | | | | | |
|---|---|---|---|---|---|---|---|---|---|---|---|---|---|---|
| 02 | 80 | 32 | 30 | 30 | 30 | 30 | 30 | 30 | 2E | 30 | 30 | 03 | 39 | 44 |
| STX | ADD | WINDOW | | | RD | 000.00 | | | | | | ETX | CRC | |

Command : FREQUENCY
Source : PC
Destination : Inverter

| | | | | | | | | |
|---|---|---|---|---|---|---|---|---|
| 02 | 80 | 32 | 30 | 33 | 30 | 03 | 38 | 32 |
| STX | ADDR | WINDOW | | | RD | ETX | CRC | |

Source : Inverter
Destination : PC

| | | | | | | | | | | | | | | |
|---|---|---|---|---|---|---|---|---|---|---|---|---|---|---|
| 02 | 80 | 32 | 30 | 33 | 30 | 30 | 30 | 30 | 30 | 35 | 36 | 03 | 38 | 31 |
| STX | ADD | WINDOW | | | RD | 000056 | | | | | | ETX | CRC | |

Command : ERR-CODE
Source : PC
Destination : Inverter

| | | | | | | | | |
|---|---|---|---|---|---|---|---|---|
| 02 | 80 | 32 | 30 | 36 | 30 | 03 | 38 | 37 |
| STX | ADDR | WINDOW | | | RD | ETX | CRC | |

Source : Inverter
Destination : PC

| | | | | | | | | | | | | | | |
|---|---|---|---|---|---|---|---|---|---|---|---|---|---|---|
| 02 | 80 | 32 | 30 | 36 | 30 | 30 | 30 | 30 | 30 | 30 | 30 | 03 | 38 | 37 |
| STX | ADD | WINDOW | | | RD | 000000 | | | | | | ETX | CRC | |

***NOTE***

*Using the RS 485 interface, the message structure remains identical to the one used for the RS 232/422 interface, the only difference being that the value assigned to the ADDRESS <ADDR> field in this case can be any hex value, while for the RS 232/422 this value must be set to 80 hex.*

### *Window-based Protocol*

The following table, valid for the RS 232, RS 422 and RS 485 interfaces, describes each single window used in the protocol.

| WIN | R | W | T | Description |
|---|---|---|---|---|
| 000 | X | X | L | START/STOP |
| 001 | X | X | L | SPEED SELECTION ACTIVE [0=HS / 1=LS] |
| | | | | |
| 100 | X | X | L | SOFT START [0=NO / 1=YES] |
| 102 | X | X | L | WATER COOLING [0=NO / 1=YES] |
| 107 | X | X | N | MODE (0, 1, 2) [FRONT, REMOTE, SERIAL] |
| 108 | X | X | N | BAUD_RATE (0-4) [600, 1200, 2400, 4800, 9600] |
| 109 | | X | L | PUMP LIFE RESET AND FLOW METER ALARMS (TYPE “ON” TO RESET) |
| 110 | X | X | N | THRESHOLD HS [Krpm] |
| 111 | X | X | N | THRESHOLD LS [Krpm] |
| 112 | X | X | L | HEATER JACKET ENABLE [0=ON / 1=OFF] |
| 113 | X | X | N | HEATER JACKET TEMPERATURE SETTING [Degrees] |
| 114 | X | X | L | GAS TYPE [0=$N_2$ / 1=Ar] |
| 115 | X | X | N | THRESHOLD FLUSSIMETRO [sccm] |
| 116 | X | X | N | HIGH SPEED ADJUST [Krpm] |
| 117 | X | X | N | LOW SPEED ADJUST [Krpm] |
| 118 | X | X | L | LOWER BEARING TEMPERATURE MEASUREMENT ENABLE [0=NO / 1=YES] |
| 119 | X | X | L | HOST / PRINTER MODE [0=HOST / 1=PRINTER] |
| | | | | |
| 200 | X | | N | CURRENT [A] |
| 201 | X | | N | VOLTAGE [V] |
| 202 | X | | N | POWER [W] |
| 203 | X | | N | FREQUENCY [Krpm] |
| 205 | X | | N | PUMP STATE (0÷6) [STOP, WAITING INTERLOCK, STARTING, NORMAL,. HIGH LOAD, FAILURE, APPROACHING] |
| 206 | X | | N | ERROR CODE (0÷7) [NO ERROR, OVERVOLTAGE, SHORT CIRCUIT,CHECK CONNECTION, TOO HIGH LOAD, OVERRIDE, PUMP OVERTEMP, CONTROLLER OVERTEMP] |
| | | | | |
| 207 | X | | L | STATE S1 [0=OFF / 1=ON] |
| 208 | X | | L | STATE S2 [0=OFF / 1=ON] |
| 209 | X | | N | UPPER BEARING TEMPERATURE [0-99 °C] |
| 210 | X | | N | LOWER BEARING TEMPERATURE [0-99 °C] |
| 211 | X | | N | FLOW READ [0-100 sccm] |
| 212 | X | | L | STATUS OUTPUT FLOW METER [0=OFF / 1=ON] |
| 213 | X | | N | FLOW METER ALARM TIME RELATING TO THE LAST EVENT |
| 214 | X | | N | FLOW METER ALARM CYCLE NUMBER RELATING TO THE LAST EVENT |
| 215 | X | | N | FLOW METER ALARM EVENT NUMBER |
| | | | | |
| 300 | X | | N | CYCLE TIME (0-999.999) IN MINUTES |
| 301 | X | | N | CYCLE NUMBER (0- 65.535) IN COUNTS |
| 302 | X | | N | PUMP LIFE (0-999.999) IN HOURS |
| | | | | |
| 400 | X | | A | CRC PROGRAM LISTING |
| 402 | X | | A | CRC PARAMETER LISTING |

**WIN** = Window
**R** = Read
**W** = Write

**T** = Type:
**L** = Logical
**N** = Numeric
**A** = Alphanumeric

## USE

### General

Make all vacuum manifold and electrical connections and refer to Turbo-V ICE pump instruction manual before to operating the Turbo-V ICE controller.

**WARNING!**

To avoid injury to personnel and damage to the equipment, if the pump is laying on a table make sure it is steady. Never operate the Turbo-V ICE pump if the pump inlet is not connected to the system or blanked off.

**NOTE**

*The input signal P1 connector should be left in position including the shipping links if no external connections are made. The forepump and the Turbo-V ICE pump can be switched on at the same time.*

**NOTE**

*When the Turbo-V 300 ICE pump is baked by a membrane pump, the Soft Start mode should be deselected.*

### Startup

- Plug the controller power cable into a suitable power source.
- The display lights, and shows:

| | | | | | | | | | | | | | | | |
|---|---|---|---|---|---|---|---|---|---|---|---|---|---|---|---|
| | | | | A | U | T | O | T | E | S | T | | | | |
| | | | | | C | H | E | C | K | | | | | | |

**NOTE**

*The above message is only displayed when a board with optional serial ports is installed.*

| | | | | | | | | | | | | | | | |
|---|---|---|---|---|---|---|---|---|---|---|---|---|---|---|---|
| | | | | A | U | T | O | T | E | S | T | | | | |
| | | | | | | | O | K | | | | | | | |

| | | | | | | | | | | | | | | | |
|---|---|---|---|---|---|---|---|---|---|---|---|---|---|---|---|
| R | E | A | D | Y | | F | O | R | | L | O | C | A | L | |
| S | O | F | T | | S | T | A | R | T | | | | | H | S |

The controller with the Soft Start mode allows the pump to ramp-up to Normal Speed slowly with a minimum ramp-up time of 30 minutes and a maximum of about 55 minutes.
The Soft Start mode is always operative as default mode. If it is necessary to deselect this mode refer to the following paragraph.
If the Soft Start mode is deselected, the ramp- up will be done within 180 seconds and the display changes as follows:

| | | | | | | | | | | | | | | | |
|---|---|---|---|---|---|---|---|---|---|---|---|---|---|---|---|
| P | U | M | P | | R | E | A | D | Y | : | | P | U | S | H |
| | S | T | A | R | T | | B | U | T | T | O | N | | H | S |

**NOTE**

*If the pump is not connected, the display will be as shown:*

| | | | | | | | | | | | | | | | |
|---|---|---|---|---|---|---|---|---|---|---|---|---|---|---|---|
| C | H | E | C | K | | C | O | N | N | E | C | T | I | O | N |
| | | | T | O | | P | U | M | P | | | | | H | S |

**NOTE**

*After pressing the START push-button, if the P1 connector is not in place with the link or the external interlock connection are open, the display will be as shown in the following figure.*

| | | | | | | | | | | | | | | | |
|---|---|---|---|---|---|---|---|---|---|---|---|---|---|---|---|
| P | U | M | P | | W | A | I | T | I | N | G | | | | |
| I | N | T | E | R | L | O | C | K | | | | | | | |

Unplug the controller power cable and verify the P1 connection according to paragraph “Interconnections”.

- Press the PUMP CURRENT push-button and the display shows (e.g.):

| | | | | | | | | | | | | | | | |
|---|---|---|---|---|---|---|---|---|---|---|---|---|---|---|---|
| X | X | | K | R | P | M | | | P | = | X | X | X | W | |
| T | 1 | = | X | X | ° | C | | | I | = | X | X | . | X | A |

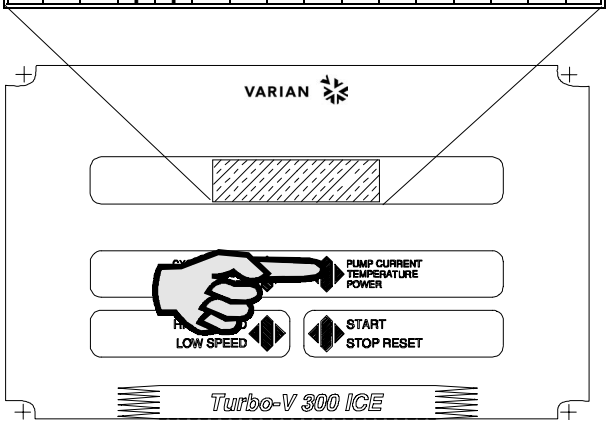


where:

- **I** = is the DC current drawn by the pump range (0.00 to 10.0 Ampere)
- **P**= is the DC power drawn by the pump (range 0 to 999 Watt)
- **KRPM** = is the theoretical rotational speed of the pump as a function of the controller output frequency (range 3 to 56 KRPM)
- **T1** = is the temperature of the outer ring of the upper bearing (range 00 to 99°C)

- Press the PUMP CURRENT push-button and the display shows:

| | | | | | | | | | | | | | | | |
|---|---|---|---|---|---|---|---|---|---|---|---|---|---|---|---|
| X | X | | K | R | P | M | | | P | = | X | X | X | W | |
| N | 2 | | = | | X | X | X | | S | C | C | M | | | |

Where:

N2 = Gas flow (Nitrogen or Argon) expressed in SCCM (Standard cubic centimeters per minute)

- Press the PUMP CURRENT push-button and the display shows

| | | | | | | | | | | | | | | | |
|---|---|---|---|---|---|---|---|---|---|---|---|---|---|---|---|
| L | A | S | T | | A | L | A | R | M | : | X | X | X | X | X |
| T | = | X | X | X | X | X | h | | C | = | X | X | X | X | X |

Where:

- **Last alarm** = number of alarms sounded
- **T** = Pump life span relating to the last alarm
- **C** = Cycle during which the last alarm occured

- Press the CYCLE NUMBER push-button twice and the display shows:

| | | | | | | | | | | | | | | | |
|---|---|---|---|---|---|---|---|---|---|---|---|---|---|---|---|
| X | X | X | X | C | Y | C | L | E | | X | X | X | X | X | m |
| P | U | M | P | | L | I | F | E | | X | X | X | X | X | h |

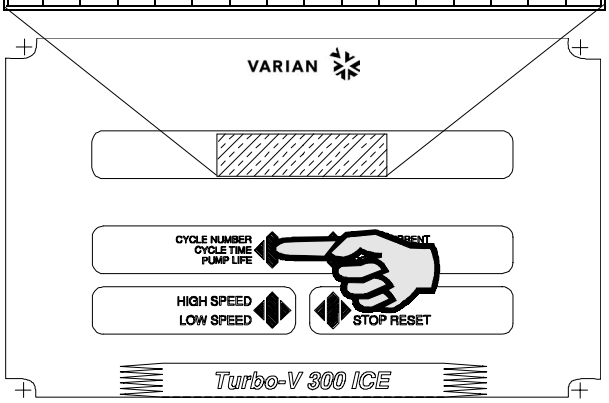


where:

- **CYCLE** = are the cycles performed (range 0 to 9999)
- **m** = is the elapsed time related to the cycle number displayed (range 0 to 99999 minutes)
- **PUMP LIFE** = is the total operation time of the pump (range 0 to 99999 hours).

### *Front / Remote / Serial Selection*

Press CYCLE NUMBER and PUMP CURRENT pushbuttons together for at least 2 seconds and the processor enters a routine where it is possible to program the controller.

In this routine, the CYCLE push-button is used for choosing/changing the value or condition; the PUMP CURRENT push-button is used to enter and confirm the value.

At any time it is possible to exit this routine by pressing the CYCLE and PUMP CURRENT pushbuttons at the same time for at least 2 seconds.

The display shows:

| | | | | | | | | | | | | | | | |
|---|---|---|---|---|---|---|---|---|---|---|---|---|---|---|---|
| C | O | N | F | I | G | U | R | A | T | I | O | N | | | |
| | | | | | | | | | | | | | | | |

| | | | | | | | | | | | | | | | |
|---|---|---|---|---|---|---|---|---|---|---|---|---|---|---|---|
| S | O | F | T | W | A | R | E | | V | E | R | S | I | O | N |
| | | Q | E | X | X | X | X | X | X | X | X | X | | | |

| | | | | | | | | | | | | | | | |
|---|---|---|---|---|---|---|---|---|---|---|---|---|---|---|---|
| H | I | G | H | | S | P | E | E | D | | | | | | |
| S | E | T | T | I | N | G | : | | X | X | K | R | P | M | |

Where:
- XX = 27 ÷ 56 KRPM

Confirm the flasing digit by pressing the PUMP CURRENT key

| | | | | | | | | | | | | | | | |
|---|---|---|---|---|---|---|---|---|---|---|---|---|---|---|---|
| L | O | W | | | S | P | E | E | D | | | | | | |
| S | E | T | T | I | N | G | : | | X | X | K | R | P | M | |

Where:
- XX = 12 ÷ 56 KRPM

Confirm the flashing digit by pressing the PUMP CURRENT key

| | | | | | | | | | | | | | | | |
|---|---|---|---|---|---|---|---|---|---|---|---|---|---|---|---|
| H | . | S | . | | T | H | R | E | S | H | O | L | D | | |
| S | E | T | T | I | N | G | : | | X | X | K | R | P | M | |

Where: **XXKRPM** = is the switch point of relay S1 at the preset turbopump speed, adjustable from 00 to 56 KRPM. The speed threshold will condition the S1 and S2 operation (see the following cycle diagram] and it is factory-set to 53 KRPM.
Press the CYCLE NUMBER push-button to select the first number.

| | | | | | | | | | | | | | | | |
|---|---|---|---|---|---|---|---|---|---|---|---|---|---|---|---|
| L | . | S | . | | T | H | R | E | S | H | O | L | D | | |
| S | E | T | T | I | N | G | : | | X | X | K | R | P | M | |

Where: **XXKRPM** = is the switch point of relay S1 at the preset turbopump speed, adjustable from 00 to 42 KRPM. The speed threshold will condition the S1 and S2 operation (see the following cycle diagram] and it is factory-set to 24 KRPM. Press the CYCLE NUMBER push-button to select the first number.

- Press the PUMP CURRENT push-button and the display shows

| | | | | | | | | | | | | | | | |
|---|---|---|---|---|---|---|---|---|---|---|---|---|---|---|---|
| | | P | U | R | G | E | | F | L | O | W | | | | |
| S | E | T | : | | X | X | X | S | C | C | M | | | | |

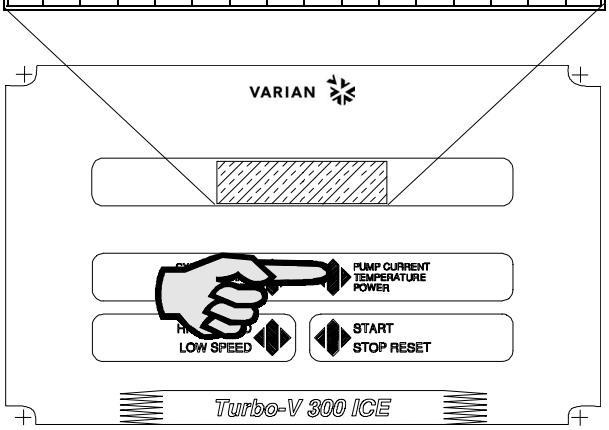


Gas flow alarm threshold under which an alarm signal is given (Flow meter alarm). The default value is set to 20 sccm, the variability range is 0 - 100.

- Press the PUMP CURRENT push-button and the display shows

| | | | | | | | | | | | | | | | |
|---|---|---|---|---|---|---|---|---|---|---|---|---|---|---|---|
| | G | A | S | | T | Y | P | E | | | | | | | |
| S | E | L | E | C | T | I | O | N | : | | N | 2 | | | |

Select the type of purge gas, the default is Nitrogen. Argon can be seleted if needed.

- Press the PUMP CURRENT push-button and the display shows

| | | | | | | | | | | | | | | | |
|---|---|---|---|---|---|---|---|---|---|---|---|---|---|---|---|
| | H | E | A | T | E | R | | J | A | C | K | E | T | | |
| S | E | L | E | C | T | I | O | N | : | | O | N | | | |

Heater Jacket power ON or OFF: setting ON powers on the Heater Jacket, setting OFF powers it off.

The Heater Jacket automatically switches to OFF when the controller is in the Failure State.

- Press the PUMP CURRENT push-button and the display shows

| | | | | | | | | | | | | | | | |
|---|---|---|---|---|---|---|---|---|---|---|---|---|---|---|---|
| H | E | A | T | | J | A | C | K | E | T | | T | E | M | P |
| S | E | T | T | I | N | G | : | | X | X | ° | C | | | |

Heater jacket operating temperature selection. The range is 40-90 °C, set to 65 °C by default.

- Press the PUMP CURRENT push-button and the display shows

| | | | | | | | | | | | | | | | |
|---|---|---|---|---|---|---|---|---|---|---|---|---|---|---|---|
| | L | O | W | E | R | | B | E | A | R | I | N | G | | |
| T | 2 | | S | E | N | S | O | R | : | | O | F | F | | |

Detection of the pump's lower bearing temperature. OFF will always be indicated if there is no sensor on this bearing.

and then:

| | | | | | | | | | | | | | | | |
|---|---|---|---|---|---|---|---|---|---|---|---|---|---|---|---|
| S | O | F | T | | S | T | A | R | T | | M | O | D | E | |
| S | E | L | E | C | T | I | O | N | : | | X | X | X | | |

where: **XXX** = YES or NO.

If YES is selected, the Soft Start mode allows the pump to rump-up the Normal speed within ten steps.
When NO is selected, the Soft Start mode is deselected and the rump-up of the pump will be done within 180 seconds.
The controller is factory set to YES.

***NOTE***

*The Soft Start mode may be deselected/selected only when the pump is stopped.*

- Press CYCLE NUMBER push-button to select YES or NO

| | | | | | | | | | | | | | | | |
|---|---|---|---|---|---|---|---|---|---|---|---|---|---|---|---|
| S | O | F | T | | S | T | A | R | T | | M | O | D | E | |
| S | E | L | E | C | T | I | O | N | : | | Y | E | S | | |

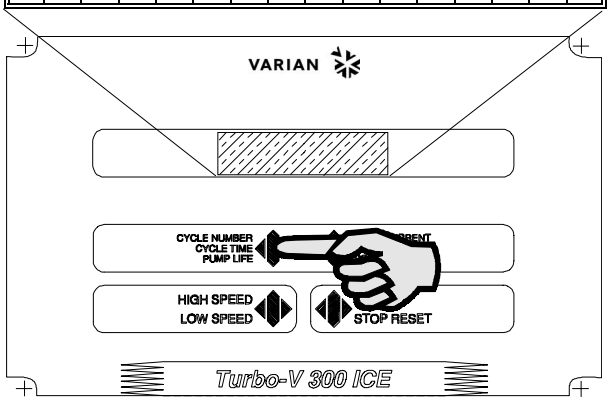


- Press PUMP CURRENT push-button and the display shows:

| | | | | | | | | | | | | | | | |
|---|---|---|---|---|---|---|---|---|---|---|---|---|---|---|---|
| | W | A | T | E | R | | C | O | O | L | I | N | G | | ? |
| | | | | | | N | O | | | | | | | | |

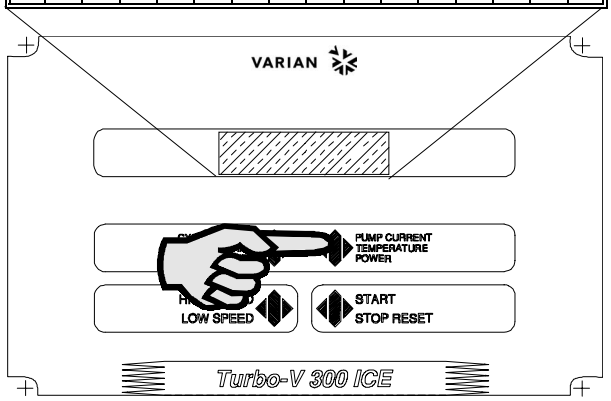


If necessary press CYCLE NUMBER to select YES or NO.
The controller is factory set to NO.

- Enter the selection by pressing the PUMP CURRENT push-button, and the display shows:

| | | | | | | | | | | | | | | | |
|---|---|---|---|---|---|---|---|---|---|---|---|---|---|---|---|
| F | R | O | N | T | / | R | E | M | O | T | E | / | S | E | R |
| S | E | L | E | C | T | I | O | N | : | X | X | X | X | X | X |

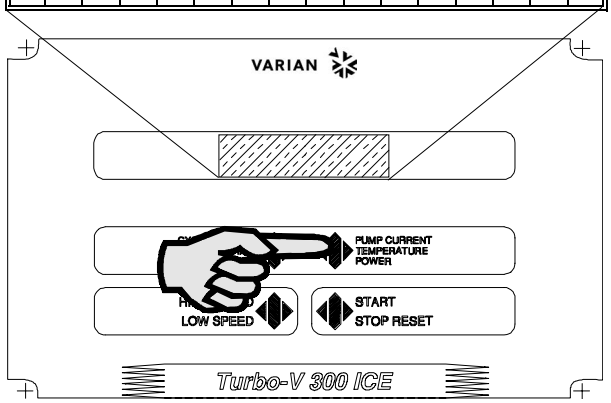


where: **XXXXXX** = means the word FRONT. REMOTE, or SER depending on the last selection.
The controller is factory-set for FRONT panel operation.
SER will only be displayed if the optional serial card is installed.

- Choose the desired selection by pressing the CYCLE push-button.

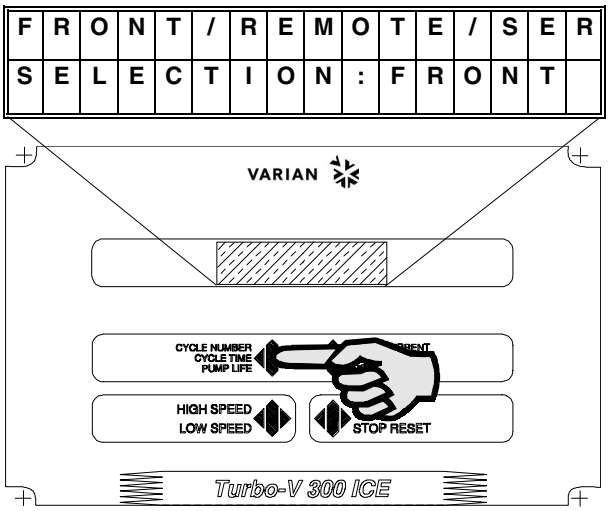


- Press PUMP CURRENT push-button and the display shows

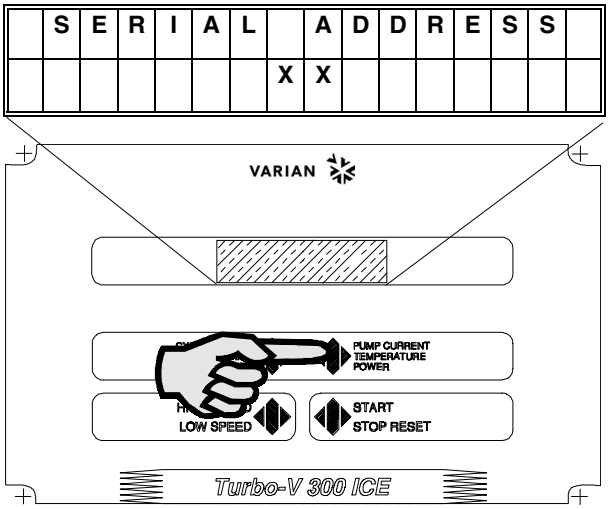


This message will only be displayed if the RS 485 module is installed.

Where:
XX = 00 ÷ 31 is the unit address

- Press the PUMP CURRENT push-button to enter the value and ,if the serial option is installed, the display shows:

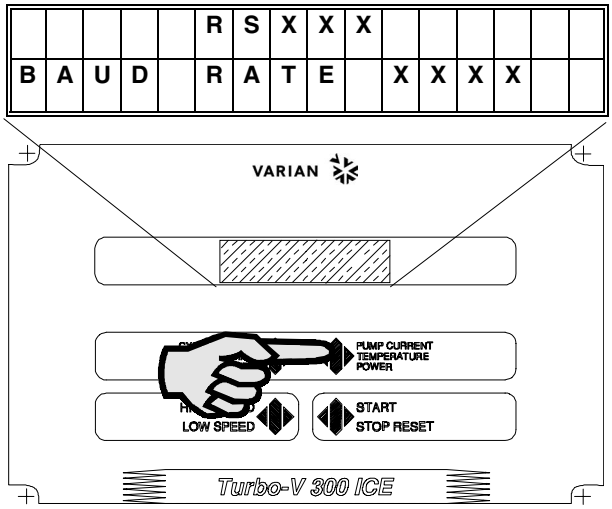


where:BAUD RATE **XXXX** = means 600, 1200, 2400, 4800, 9600 baud rate for the host computer or printer communication. The controller is factory-set for 9600 baud rate operation.

The value which corresponds to the board installed will be assigned to RSXXX.

- If the RS 232 is installed, enter the value by pressing the PUMP CURRENT push-button and, if the serial option is installed, the display shows:

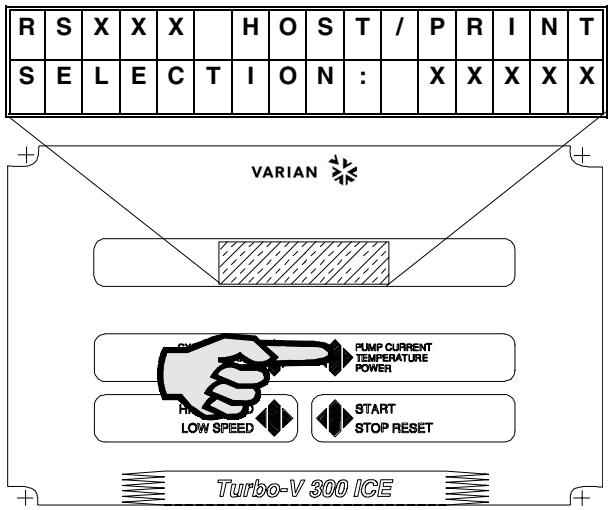


This message will only be displayed if the RS232 interface is present.

where:SELECTION: **XXXXX** = means HOST or PRINT.

The controller is factory-set to HOST.

With the RS 232/422/485 connected, a bi-directional communication is established by selecting HOST. Data are sent to an external computer every time the external computer asks for the values.
The available data are listed in the read mode in the serial protocol table.

**NOTE**

*With the serial module installed, the data can also be read in the FRONT or REMOTE mode.*

If PRINT is selected and a printer is connected on RS 232/422 line, an unidirectional communication is established and every minute the data are sent to the printer, even if the pump is not running.
The set of data available are:

- Pump speed KRPM
- Pump temperature
- Pump current A
- Pump power W
- S1 condition
- S2 condition

- Confirm the selection by pressing the PUMP CURRENT push-button.
- In this way you enter into an operating phase named "Monitor Relay Programming" described later.

- Enter the value by pressing the PUMP CURRENT push-button.

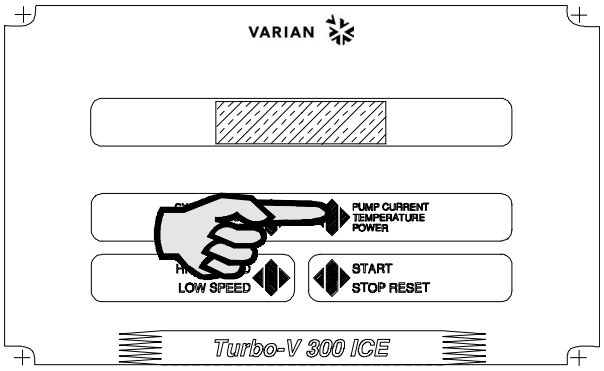


- Press PUMP CURRENT to confirm. and the display shows:

| | | | | | | | | | | | | | | | |
|---|---|---|---|---|---|---|---|---|---|---|---|---|---|---|---|
| P | U | M | P | | L | I | F | E | | X | X | X | X | X | h |
| | | | R | E | S | E | T | ? | | X | X | X | | | |

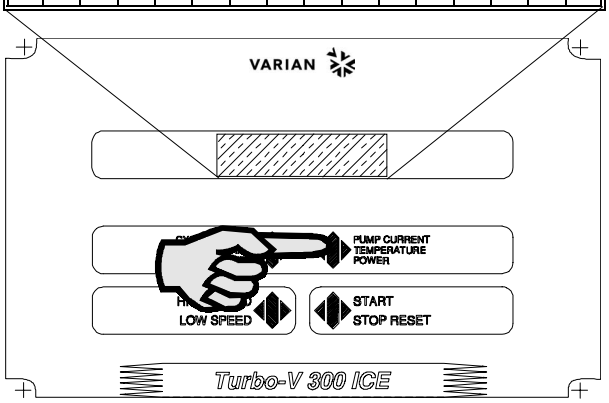


where:
- **PUMP LIFE** = is the elapsed operating time range 000 to 99999 hours.
- **RESET XXX** = YES or NO.

The controller is factory-set to NO.

- If YES is selected, the pump life span and number of events (flow meter alarm) shall be reset to 000. After selecting YES, press the PUMP CURRENT push-button to enter the command and the display shows:

| | | | | | | | | | | | | | | | |
|---|---|---|---|---|---|---|---|---|---|---|---|---|---|---|---|
| R | E | A | D | Y | | F | O | R | | L | O | C | A | L | |
| S | O | F | T | | S | T | A | R | T | | | | | H | S |

or

| | | | | | | | | | | | | | | | |
|---|---|---|---|---|---|---|---|---|---|---|---|---|---|---|---|
| P | U | M | P | | R | E | A | D | Y | : | | P | U | S | H |
| | S | T | A | R | T | | B | U | T | T | O | N | | H | S |

and the controller is ready to restart (see paragraph "Startup").

**NOTE**

*When PUMP LIFE is reset to 000, the CYCLE number is also reset to 000.*

### Starting the Pump

If the forepump and vent device are not operated by the controller, close the vent valve and switch on the forepump.

**NOTE**

*Before starting the pump the cooling mode must be selected.*

**NOTE**

*With the FRONT panel operation selected, the REMOTE and RS 232/422/485 operations are inoperative; conversely, the CYCLE NUMBER and PUMP CURRENT push-buttons are always active, even when the operating mode selected is REMOTE or RS 232/422/485.*

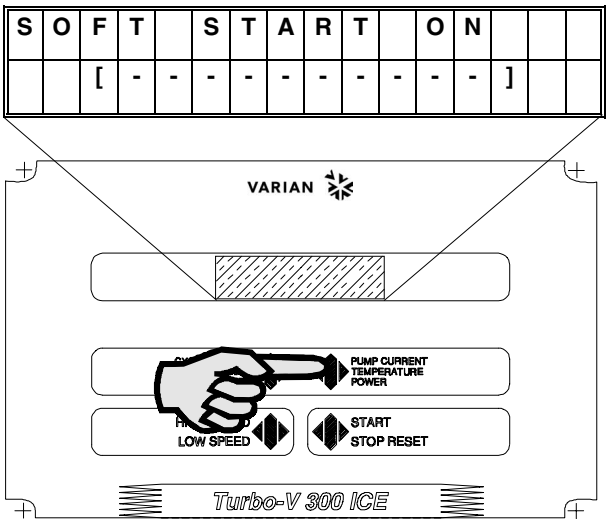


Where the sign minus (-) become a square ( ž ) when the pump finish the ramp-up step. The active step is indicated by a flashing square ( ž ).

As the ten steps are fully covered, the pump will reach the Normal operation. If during the Soft Start mode the power drawn by the pump exceed 120 W the speed of the pump is decreased to maintain the maximum power allowable (120 W).

- If the Soft Start mode has been deselected the display will change and shows:

| | | | | | | | | | | | | | | | |
|---|---|---|---|---|---|---|---|---|---|---|---|---|---|---|---|
| P | U | M | P | | I | S | | S | T | A | R | T | I | N | G |
| 1 | 2 | | X | X | | K | R | P | M | | H | J | | H | S |

where:

**1 2** = contrast inverted identifies the set point condition:

- **1** is displayed when relay S1 is energized and the related output is 24 V.
- **2** is displayed when relay S2 is energized and the related output is 24V.

**XX KRPM** = indicates the actual theoretical rotational speed of the pump as a function of the controller output frequency (range 3 to 56 KRPM).

**HJ** = displayed only when the heater jacket is active.

**HS/HL** = indicates that the pump is working in the High speed or Low speed mode.

After START command, frequency output will be at the maximum level, then the frequency will decrease to a value proportional to the pump rotational speed (about 3 KRPM if the pump is completely stopped).

The pump will accelerate to its normal rotational speed.

- During acceleration of the pump or during any operating condition, it is always possible to select the other parameters to be displayed pressing the PUMP CURRENT or the CYCLE NUMBER pushbuttons.
- After the run up time and when the normal rotational speed is reached, the display will be as follows, even if any previous display selection was made, and the normal condition has been reached.

| | | | | | | | | | | | | | | | |
|---|---|---|---|---|---|---|---|---|---|---|---|---|---|---|---|
| N | O | R | M | A | L | | O | P | E | R | A | T | I | O | N |
| 1 | 2 | | X | X | | K | R | P | M | | H | J | | H | S |

where: **XX** = indicates the rotational speed (53 KRPM for high speed, or 24 KRPM for low speed).

### Monitor Relay Programming

- The display shows:

| | | | | | | | | | | | | | | | |
|---|---|---|---|---|---|---|---|---|---|---|---|---|---|---|---|
| H | . | S | . | | T | H | R | E | S | H | O | L | D | | |
| S | E | T | T | I | N | G | ; | | X | X | K | R | P | M | |

where: **XXKRPM** = is the switch point of relay S1 at the preset turbopump speed, adjustable from 00 to 56 KRPM.
The speed threshold will condition the S1 operation (see the following cycle diagram] and it is factory-set to 53 KRPM.
The speed threshold will condition the S2 operation (see the following cycle diagram] and it is factory-set to 24 KRPM.

### Pump Shutdown

Press the front panel STOP push-button or remove the remote signal; the power from the turbopump will be removed and the pump will begin to slow down.

### Power Failure

In the event of a power failure (momentary or long term), the Turbo-V ICE controller will stop the turbopump and all the interconnected pumps/devices. The Turbo-V ICE vent valve device, if used, will vent the turbopump only if the power failure is longer than the preset delay time. When power is restored, the Turbo-V ICE controller automatically restarts the interconnected devices and the turbopump in the proper sequence.

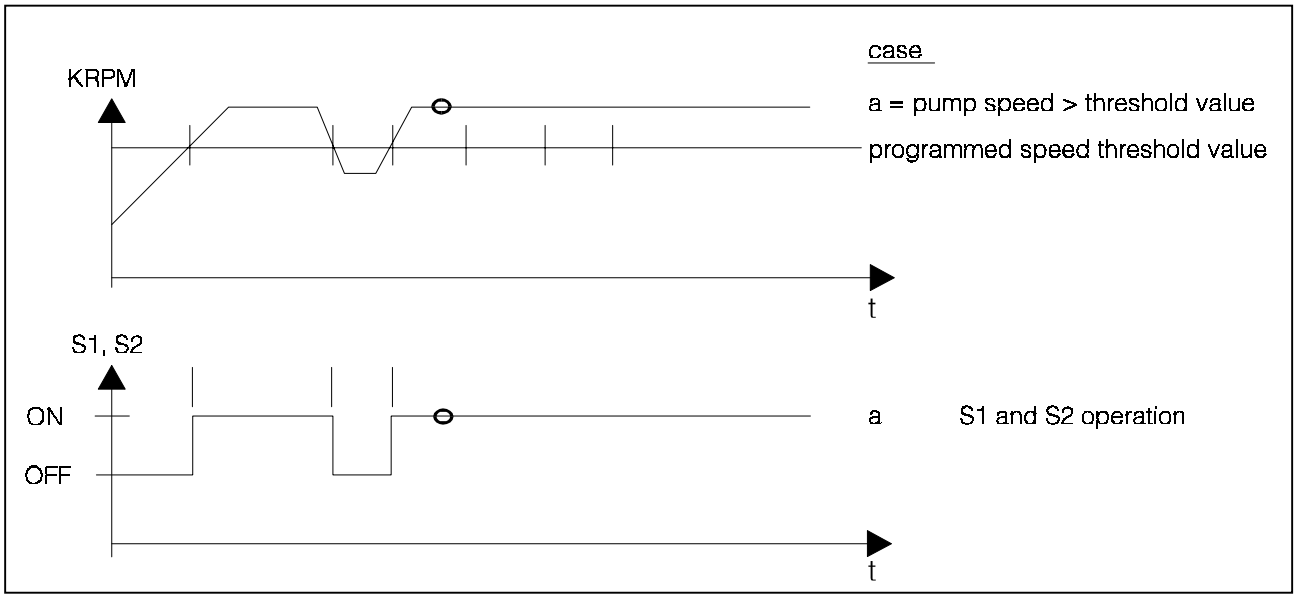


*Cycle diagram*

### Operating the Pump

After the starting period, if the system has a vacuum leak or the pressure in the pump chamber is high (from 1 mbar to atmosphere), the pump continues to operate indefinitely. If the gas load at the turbopump inlet flange continues to stay high, the power drawn by the turbopump increases up to the maximum value (250 W with water cooling, or 150 W with air cooling).
Then the Turbo-V ICE pump is slowed down in pro- portion to the gas load at least until it reaches about 4 or 3 KRPM.
As soon as the gas load decreases, the pump will automatically accelerate to reach normal operation. The pump can be stopped at any rotational speed and can be restarted at any rotational speed from either the front panel buttons or the remote connections. The controller automatically synchronizes the output to the rotational speed of the pump and then accelerates linearly up to the nominal speed or within steps if the Soft Start has been selected.

The display shows:

| | | | | | | | | | | | | | | | |
|---|---|---|---|---|---|---|---|---|---|---|---|---|---|---|---|
| P | U | M | P | | I | S | | S | T | A | R | T | I | N | G |
| 1 | 2 | | X | X | | K | R | P | M | | H | J | | H | S |

until normal operation achieved.

### Remote Control Mode Operation

If remote signals are used to operate the controller, it must be programmed for remote operation (see paragraph "Operating parameter selections") and when ready to start, the display shows:

| | | | | | | | | | | | | | | | |
|---|---|---|---|---|---|---|---|---|---|---|---|---|---|---|---|
| R | E | A | D | Y | | F | O | R | | R | E | M | O | T | E |
| S | O | F | T | | S | T | A | R | T | | | | | H | S |

If the Soft Start has been deselected the display shows:

| | | | | | | | | | | | | | | | |
|---|---|---|---|---|---|---|---|---|---|---|---|---|---|---|---|
| P | U | M | P | | R | E | A | D | Y | : | | U | S | E | |
| | R | E | M | O | T | E | | S | T | A | R | T | | H | S |

With or without Soft Start mode selected the START/STOP and LOW SPEED front panel push- buttons are inoperative, while the CYCLE NUMBER and PUMP CURRENT pushbuttons are always active.

### *RS 232/422/485 Control Mode Operation*

If the RS 232 option is installed and the controller has been programmed for RS 232 operation, the controller may be driven by a computer and when ready to operate, the display shows:

| | | | | | | | | | | | | | | | |
|---|---|---|---|---|---|---|---|---|---|---|---|---|---|---|---|
| P | U | M | P | | R | E | A | D | Y | : | | U | S | E | |
| | R | S | 2 | 3 | 2 | | L | I | N | E | | | | H | S |

If the Soft Start has been deselected the display shows:

| | | | | | | | | | | | | | | | |
|---|---|---|---|---|---|---|---|---|---|---|---|---|---|---|---|
| R | E | A | D | Y | | F | O | R | | R | S | 2 | 3 | 2 | |
| S | O | F | T | | S | T | A | R | T | | | | | H | S |

The value which corresponds to the board installed will be assigned to RSXXX

With or without Soft Start mode selected the START/STOP, LOW SPEED functions are under computer control, while the CYCLE NUMBER and PUMP CURRENT front panel pushbuttons are always active.

## ACCESSORIES AND SPARE PARTS

| Description | Part number |
|---|---|
| J1 input mating connector | 969-9853 |
| P7 mating plug | 969-9854 |
| Pump-controller connection cable | 969-9953 |
| Mains cable (European plug, 3 m long) | SR-03-661817-01 |
| Mains cable (American plug, 120 V, 3 m long) | SR-03-661818-02 |

## OPTIONS

| Description | Part number |
|---|---|
| RS 485 computer communication kit | 969-9856 |
| RS 232 computer communication kit | 969-9857 |
| RS 422 computer communication kit | 969-9858 |
| P2 output mating connector | 969-9852 |
| Flow Meter with swagelok attachment kit | 969-9114 |
| Flow Meter with flange attachment kit | 969-9115 |
| Heater Jacket | 969-9818 |

## MAINTENANCE

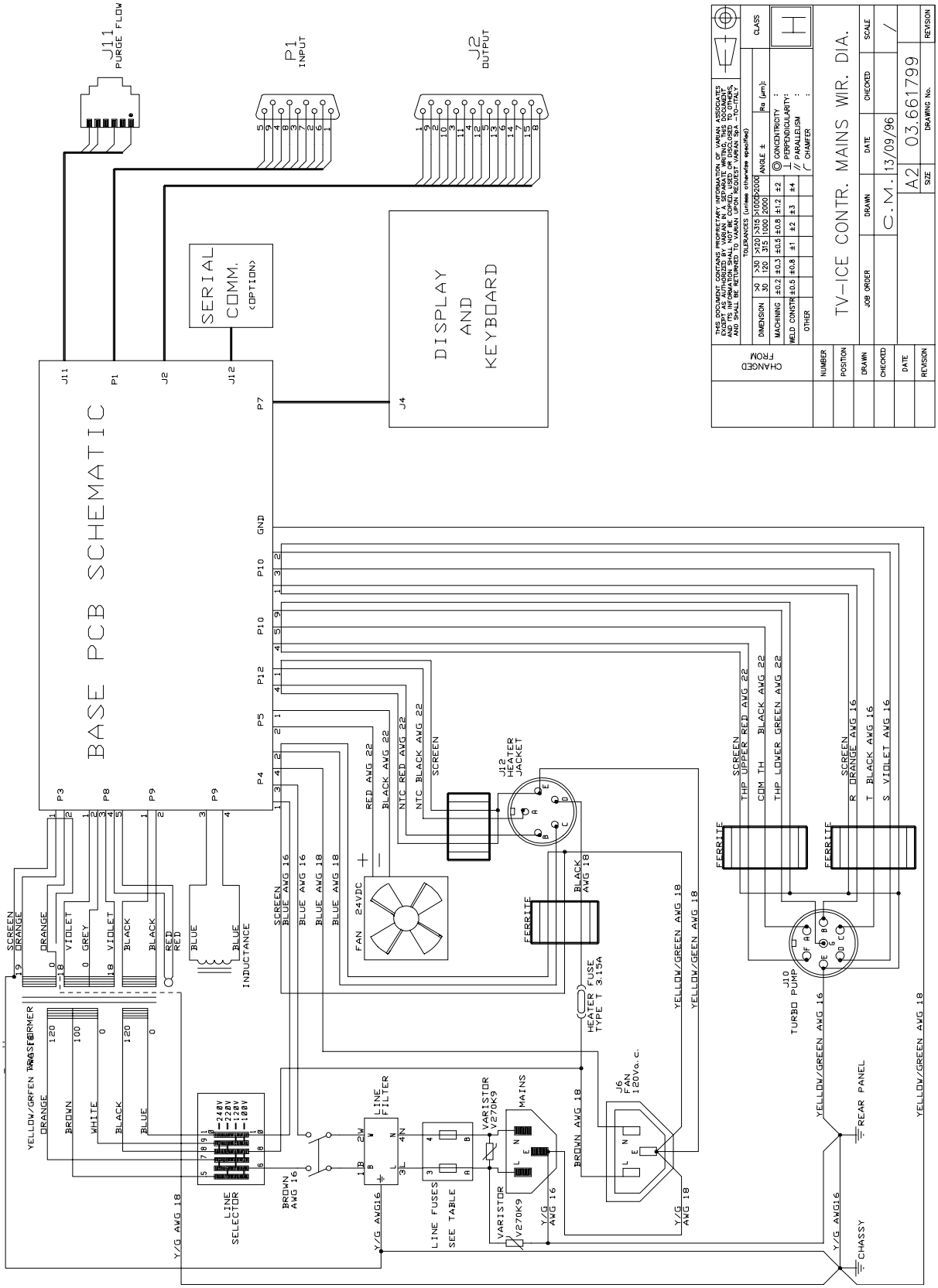

VARIAN

# *Request for Return*

ISO 9001 REGISTERED

1. A Return Authorization Number (RA#) **WILL NOT** be issued until this Request for Return is completely filled out, signed and returned to Varian Customer Service.
2. Return shipments shall be made in compliance with local and international **Shipping Regulations** (IATA, DOT, UN).
3. The customer is expected to take the following actions to ensure the **Safety** of workers at Varian: (a) Drain any oils or other liquids, (b) Purge or flush all gasses, (c) Wipe off any excess residues in or on the equipment, (d) Package the equipment to prevent shipping damage, (for Advance Exchanges please use packing material from replacement unit).
4. Make sure the shipping documents clearly show the RA# and then return the package to the Varian location nearest you.

| **North and South America** | **Europe and Middle East** | **Asia and ROW** |
|---|---|---|
| Varian Vacuum Technologies | Varian SpA | Varian Vacuum Technologies |
| 121 Hartwell Ave | Via Flli Varian 54 | Local Office |
| Lexington, MA 02421 | 10040 Leini (TO) – ITALY | |
| Phone : +1 781 8617200 | Phone: +39 011 9979111 | |
| Fax: +1 781 8609252 | Fax: +39 011 9979330 | |

***CUSTOMER INFORMATION***

Company name: ……

Contact person: Name: …… Tel: ……

Fax: …… E-Mail: ……

Ship Method: …… Shipping Collect #: …… P.O.#: ……

*Europe only*: VAT reg. Number: …… *USA only*: ☐ Taxable ☐ Non-taxable

Customer Ship To: …… Customer Bill To: ……

……

……

……

……

***PRODUCT IDENTIFICATION***

| Product Description | Varian P/N | Varian S/N | Purchase Reference |
|---|---|---|---|
| | | | |
| | | | |
| | | | |

***TYPE OF RETURN*** *(check appropriate box)*

☐ Paid Exchange ☐ Paid Repair ☐ Warranty Exchange ☐ Warranty Repair ☐ Loaner Return
☐ Credit ☐ Shipping Error ☐ Evaluation Return ☐ Calibration ☐ Other ……

***HEALTH and SAFETY CERTIFICATION***

Varian Vacuum Technologies **CAN NOT ACCEPT** any equipment which contains **BIOLOGICAL HAZARDS** or **RADIOACTIVITY**. Call Varian Customer Service to discuss alternatives if this requirement presents a problem.

The equipment listed above (check one):

☐ **HAS NOT** been exposed to any toxic or hazardous materials

OR

☐ **HAS** been exposed to any toxic or hazardous materials. In case of this selection, check boxes for any materials that equipment was exposed to, check all categories that apply:

☐ Toxic ☐ Corrosive ☐ Reactive ☐ Flammable ☐ Explosive ☐ Biological ☐ Radioactive

List all toxic or hazardous materials. Include product name, chemical name and chemical symbol or formula.

……

Print Name: …… Customer Authorized Signature: ……

Print Title: …… Date: ……/……/……

**NOTE:** If a product is received at Varian which is contaminated with a toxic or hazardous material that was not disclosed, **the customer will be held responsible** for all costs incurred to ensure the safe handling of the product, and **is liable** for any harm or injury to Varian employees as well as to any third party occurring as a result of exposure to toxic or hazardous materials present in the product.

---

Do not write below this line

Notification (RA)#: …… Customer ID#: …… Equipment #: ……

VARIAN

*Request for Return*

ISO 9001 REGISTERED

# *FAILURE REPORT*

**TURBO PUMPS and TURBOCONTROLLERS**

| | | POSITION | PARAMETERS | |
|---|---|---|---|---|
| ☐ Does not start | ☐ Noise | ☐ Vertical | Power: | Rotational Speed: |
| ☐ Does not spin freely | ☐ Vibrations | ☐ Horizontal | Current: | Inlet Pressure: |
| ☐ Does not reach full speed | ☐ Leak | ☐ Upside-down | Temp 1: | Foreline Pressure: |
| ☐ Mechanical Contact | ☐ Overtemperature | ☐ Other: | Temp 2: | Purge flow: |
| ☐ Cooling defective | | …… | OPERATION TIME: | |

**TURBOCONTROLLER ERROR MESSAGE:**

**ION PUMPS/CONTROLLERS**

| | |
|---|---|
| ☐ Bad feedthrough | ☐ Poor vacuum |
| ☐ Vacuum leak | ☐ High voltage problem |
| ☐ Error code on display | ☐ Other |

Customer application:

**VALVES/COMPONENTS**

| | |
|---|---|
| ☐ Main seal leak | ☐ Bellows leak |
| ☐ Solenoid failure | ☐ Damaged flange |
| ☐ Damaged sealing area | ☐ Other |

Customer application:

**LEAK DETECTORS**

| | |
|---|---|
| ☐ Cannot calibrate | ☐ No zero/high backround |
| ☐ Vacuum system unstable | ☐ Cannot reach test mode |
| ☐ Failed to start | ☐ Other |

Customer application:

**INSTRUMENTS**

| | |
|---|---|
| ☐ Gauge tube not working | ☐ Display problem |
| ☐ Communication failure | ☐ Degas not working |
| ☐ Error code on display | ☐ Other |

Customer application:

**PRIMARY PUMPS**

| | |
|---|---|
| ☐ Pump doesn't start | ☐ Noisy pump (describe) |
| ☐ Doesn't reach vacuum | ☐ Over temperature |
| ☐ Pump seized | ☐ Other |

Customer application:

**DIFFUSION PUMPS**

| | |
|---|---|
| ☐ Heater failure | ☐ Electrical problem |
| ☐ Doesn't reach vacuum | ☐ Cooling coil damage |
| ☐ Vacuum leak | ☐ Other |

Customer application:

## FAILURE DESCRIPTION

(Please describe in detail the nature of the malfunction to assist us in performing failure analysis):

***NOTA: Su richiesta questo documento è disponibile anche in Tedesco, Italiano e Francese.***
***REMARQUE : Sur demande ce document est également disponible en allemand, italien et français.***
***HINWEIS: Auf Aufrage ist diese Unterlage auch auf Deutsch, Italienisch und Französisch erhältlich.***

## Sales and Service Offices

**Argentina**
**Varian Argentina Ltd.**
Sucursal Argentina
Av. Ricardo Balbin 2316
1428 Buenos Aires
Argentina
Tel: (54) 1 783 5306
Fax: (54) 1 786 5172

**Australia**
**Varian Australia Pty Ltd.**
679-701 Springvale Road
Mulgrave, Victoria ZZ 3170
Australia
Tel: (61) 395607133
Fax: (61) 395607950

**Benelux**
**Varian Vacuum Technologies**
Rijksstraatweg 269 H,
3956 CP Leersum
The Netherlands
Tel: (31) 343 469910
Fax: (31) 343 469961

**Brazil**
**Varian Industria e Comercio Ltda.**
Avenida Dr. Cardoso de Mello 1644
Vila Olimpia
Sao Paulo 04548 005
Brazil
Tel: (55) 11 3845 0444
Fax: (55) 11 3845 9350

**Canada**
**Central coordination through:**
Varian Vacuum Technologies
121 Hartwell Avenue
Lexington, MA 02421
USA
Tel: (781) 861 7200
Fax: (781) 860 5437
Toll Free: (800) 882 7426

**China**
**Varian Technologies - Beijing**
Room 1201, Jinyu Mansion
No. 129A, Xuanwumen Xidajie
Xicheng District
Beijing 1000031 P.R. China
Tel: (86) 10 6608 1530
Fax: (86) 10 6608 1534

**France and Wallonie**
**Varian s.a.**
7 avenue des Tropiques
Z.A. de Courtaboeuf – B.P. 12
Les Ulis cedex (Orsay) 91941
France
Tel: (33) 1 69 86 38 13
Fax: (33) 1 69 28 23 08

**Germany and Austria**
**Varian Deutschland GmbH**
Alsfelder Strasse 6
Postfach 11 14 35
64289 Darmstadt
Germany
Tel: (49) 6151 703 353
Fax: (49) 6151 703 302

**India**
**Varian India PVT LTD**
101-108, 1st Floor
1010 Competent House
7, Nangal Raya Business Centre
New Delhi 110 046
India
Tel: (91) 11 5548444
Fax: (91) 11 5548445

**Italy**
**Varian Vacuum Technologies**
Via F.lli Varian, 54
10040 Leini, (Torino)
Italy
Tel: (39) 011 997 9111
Fax: (39) 011 997 9350

**Japan**
**Varian Vacuum Technologies**
Sumitomo Shibaura Building, 8th Floor
4-16-36 Shibaura
Minato-ku, Tokyo 108
Japan
Tel: (81) 3 5232 1253
Fax: (81) 3 5232 1263

**Korea**
**Varian Technologies Korea, Ltd.**
Shinsa 2nd Bldg. 2F
966-5 Daechi-dong
Kangnam-gu, Seoul
Korea 135-280
Tel: (82) 2 3452 2452
Fax: (82) 2 3452 2451

**Mexico**
**Varian S.A.**
Concepcion Beistegui No 109
Col Del Valle
C.P. 03100
Mexico, D.F.
Tel: (52) 5 523 9465
Fax: (52) 5 523 9472

**Taiwan**
**Varian Technologies Asia Ltd.**
18F-13 No.79, Hsin Tai Wu Road
Sec. 1, Hsi Chih
Taipei Hsien
Taiwan, R.O.C.
Tel: (886) 2 2698 9555
Fax: (886) 2 2698 9678

**UK and Ireland**
**Varian Ltd.**
28 Manor Road
Walton-On-Thames
Surrey KT 12 2QF
England
Tel: (44) 1932 89 8000
Fax: (44) 1932 22 8769

**United States**
**Varian Vacuum Technologies**
121 Hartwell Avenue
Lexington, MA 02421
USA
Tel: (781) 861 7200
Fax: (781) 860 5437
Toll Free: (800) 882 7426

**Other Countries**
**Varian Vacuum Technologies**
Via F.lli Varian, 54
10040 Leini, (Torino)
Italy
Tel: (39) 011 997 9111
Fax: (39) 011 997 9350

**Internet Users:**

**Customer Service & Technical Support:**
vtt.customer.service@varianinc.com

**Worldwide Web Site:**
www.varianinc.com/vacuum

**Order On-line:**
www.evarian.com

Representatives in most countries

VARIAN

11/01

PDF