TRIVAC® A Rotary Vane Pumps

Models S4A, D2A, D4A, 2.2 & 4.5 CFM (62 & 127 l/min)

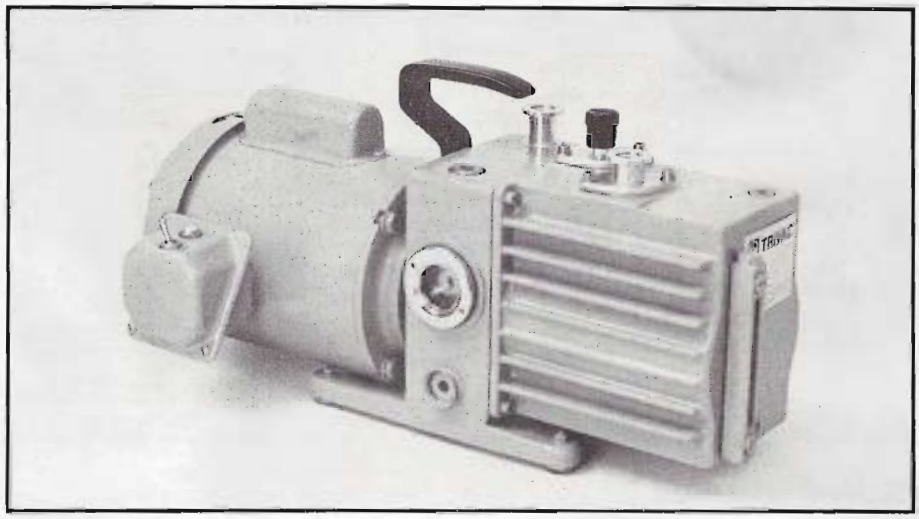

Technical Data

Performance Characteristics	S4A	D2A	D4A
Displacement ..... CFM	4.5	2.2	4.5
Displacement ..... l/min	127	62	127
Ultimate Partial Pressure ..... Torr	2×10^{-2}	3×10^{-4}	3×10^{-4}
Ultimate Total Pressure With Gas Ballast ..... Torr	3×10^{-1}	3×10^{-3}	3×10^{-3}
Water Vapor Tolerance ..... Torr	30	30	15
Oil Capacity ..... qt	0.5	0.5	0.75
Motor Power ..... HP	⅓	⅓	⅓
Pump Rotational Speed ..... RPM	1725	1725	1725
Weight, Complete ..... lb	40	41	45
Sound Pressure Level (Max) At Three Feet With Gas Ballast Closed ..... dB(A)	55	50	50
Sound Pressure Level (Avg) At Three Feet With Gas Ballast Open ..... dB(A)	63	54	56

Performance Curves

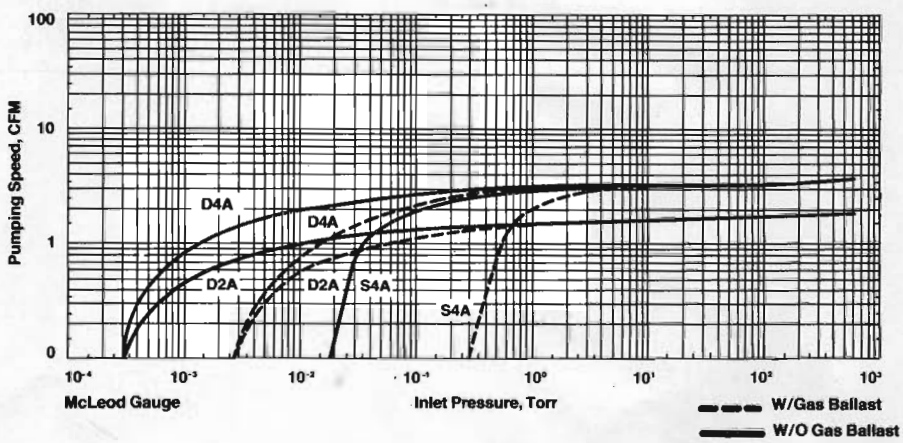

LEYBOLD-HERAEUS
VACUUM PRODUCTS INC.

Contact your nearest Leybold-Heraeus Inc. sales office for additional information, telephone orders and technical assistance.

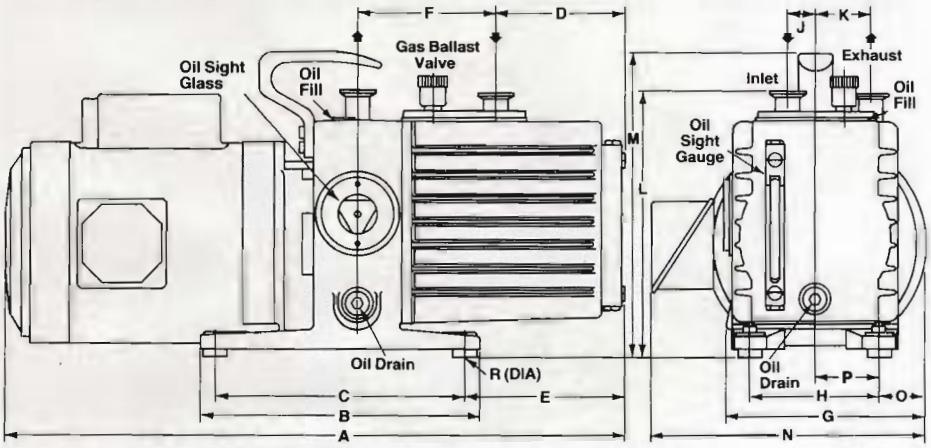

Notes
1. Add 5/32 inch for centering ring (inlet and exhaust).
2. Clamp and centering ring supplied on inlet and exhaust.

Dimensional Data

Dimensions, Inches (mm)

Pump Type	Exhaust Flange	Inlet Flange	A	B	C	D	E	F	G	H	J	K	L	M	N	O	P	R (DIA)
D2A	KF16	KF16	18 1/2 (470)	9 (228)	7 7/8 (200)	2 25/32 (71)	3 27/32 (98)	4 7/16 (112)	6 7/16 (163)	4 3/16 (106)	29/32 (23)	1 25/32 (45)	8 1/2 (216)	9 3/4 (247)	8 13/16 (224)	1 1/2 (37.5)	2 3/32 (53)	1/4 (6)
D4A	KF16	KF16	19 7/8 (504.5)	9 (228)	7 7/8 (200)	4 5/32 (105.5)	5 7/32 (132.5)	4 7/16 (112)	6 7/16 (163)	4 3/16 (106)	29/32 (23)	1 25/32 (45)	8 1/2 (216)	9 3/4 (247)	8 13/16 (224)	1 1/2 (37.5)	2 3/32 (53)	1/4 (6)
S4A	KF16	KF16	17 27/32 (453)	9 (228)	7 7/8 (200)	4 1/8 (104.5)	3 3/16 (81)	2 15/32 (62)	6 7/16 (163)	4 3/16 (106.5)	29/32 (23)	1 25/32 (45)	8 1/2 (216)	9 3/4 (247)	8 13/16 (224)	1 1/2 (37.5)	2 3/32 (53)	3/16 (5)

Ordering Information

Model	Motor Voltage	Standard Series Catalog No.	Corrosive Application Series Catalog No.
S4A(C) 4.5 CFM (127 l/min)	1/3 HP, T.E.F.C., 115/230V, 50/60 Hz wired for 115V	898810	898815
	1/3 HP, T.E.F.C., 208V, 60 Hz	898811	898816
	1/3 HP, T.E.F.C., 115/230 V, 50/60 Hz wired for 230V	898812	—
	1/3 HP, T.E.F.C., 208V, 60 Hz three phase	898813	—
	1/3 HP, T.E.F.C., 230/460V, 60 Hz three phase	898814	898819
D2A(C) 2.2 CFM (62 l/min)	1/3 HP, T.E.F.C., 115/230V, 50/60 Hz wired for 115V	898000	898005
	1/3 HP, T.E.F.C., 208V, 60 Hz	898001	898006
	1/3 HP, T.E.F.C., 115/230V, 50/60 Hz wired for 230V	898002	898007
	1/3 HP, T.E.F.C., 208V, 60 Hz three phase	898003	898008
	1/3 HP, T.E.F.C., 230/460V, 60 Hz three phase	898004	898009
D4A(C) 4.5 CFM (127 l/min)	1/3 HP, T.E.F.C., 115/230V, 50/60 Hz wired for 115V	898010	898015
	1/3 HP, T.E.F.C., 208V, 60 Hz	898011	898016
	1/3 HP, T.E.F.C., 115/230V, 50/60 Hz wired for 230V	898012	898017
	1/3 HP, T.E.F.C., 208V, 60 Hz three phase	898013	898018
	1/3 HP, T.E.F.C., 230/460V, 60 Hz three phase	898014	898019