Instruction Manual

E1M 18

Description	*Item Number*
E1M18, 100/200 V, 50 Hz or 100-105/200-210 V, 60 Hz, single-phase	*A343-15-904*
E1M18, 115/230 V, 60 Hz, single-phase	*A343-15-981*
E1M18, 220 V, 50/60 Hz, single-phase	*A343-15-920*
E1M18, 220-240 V, 50 Hz, single-phase	*A343-15-912*
E1M18, 220-240 V, 50 Hz, or 230-240 V, 60 Hz, single-phase	*A343-15-903*
E1M18, 200-230/380-460 V, 50/60 Hz, three-phase	*A343-10-940*
E1M18, 220-240 V, 50 Hz, or 230-240 V, 60 Hz, single-phase (Amphenol)	*A343-16-903*
E1M18, 110/200-240 V, 50 Hz, or 115-120/200-230 V, 60 Hz, single-phase	*A343-17-984*
E2M18, 100/200 V, 50 Hz or 100-105/200-210 V, 60 Hz, single-phase	*A363-15-904*
E2M18, 115/230 V, 60 Hz, single-phase	*A363-15-981*
E2M18, 220 V, 50/60 Hz, single-phase	*A363-15-920*
E2M18, 220-240 V, 50 Hz, single-phase	*A363-15-912*
E2M18, 220-240 V, 50 Hz, or 230-240 V, 60 Hz, single-phase	*A363-15-903*
E2M18, 200-230/380-460 V, 50/60 Hz, three-phase	*A363-10-940*
E2M18, 110/200-240 V, 50 Hz, or 115-120/200-230 V, 60 Hz, single-phase	*A363-17-984*
E2M18-FF, 200-230/380-460 V, 50/60 Hz, three-phase	*A363-21-940*
E2M18-FF, 100/200 V, 50/60 Hz, single-phase	*A363-25-904*
E2M18, 220-240 V, 50 Hz, single-phase	*A363-25-912*

BOC EDWARDS

CONTENTS

CONTENTS (CONTINUED)

ILLUSTRATIONS

1 INTRODUCTION

1.1 Scope and definitions

T hi

Ed wa rd
Y

R e a d
p
W A R N

a nd

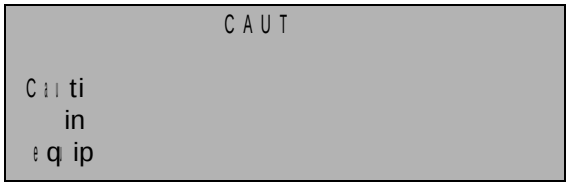

T he
the

T he

W a rning
d

W a rning

W a rning

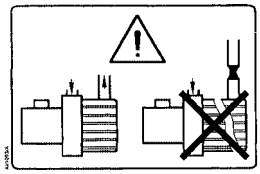

W a rning
the

1.2 ATEX directive implications

s

- T hi o
  re q ir e
  in
  E r m
  M a rc h l
  the o
  pr
  e xpl

  T he
  p
  e q ip
  a
  l

  ha
  e xte rna l o
  s
  m

  T ha re
  p
  p
  pre d ic ta ble
  D ire c tive
  d e

  tha t o
  c
  within
  a ppr
  c a

  while

- When
  pre
  - N
  - En
  - U
    nitr
    l
    c
    in
    tha n
    e xpl
- F
  Ed wa rd
  Ed wa rd

1.3 Description

The
n
The
p
p
te r
e nvir
d rive
The
the
The
d e vic e
will

An
bea ring s
ha o
d i
a s
a ir s
l nle o
thi o
Y s
o
The o
o
The s
g o
a l s
D e ta il
re c

1.4 Gas-ballast

s
When m
thr
pre ve nt
p s
c a l m
c m
m
Air o
p
s
The
- F r m
  intr .
  a d d iti o
  a nd o
  m
- With
  the s

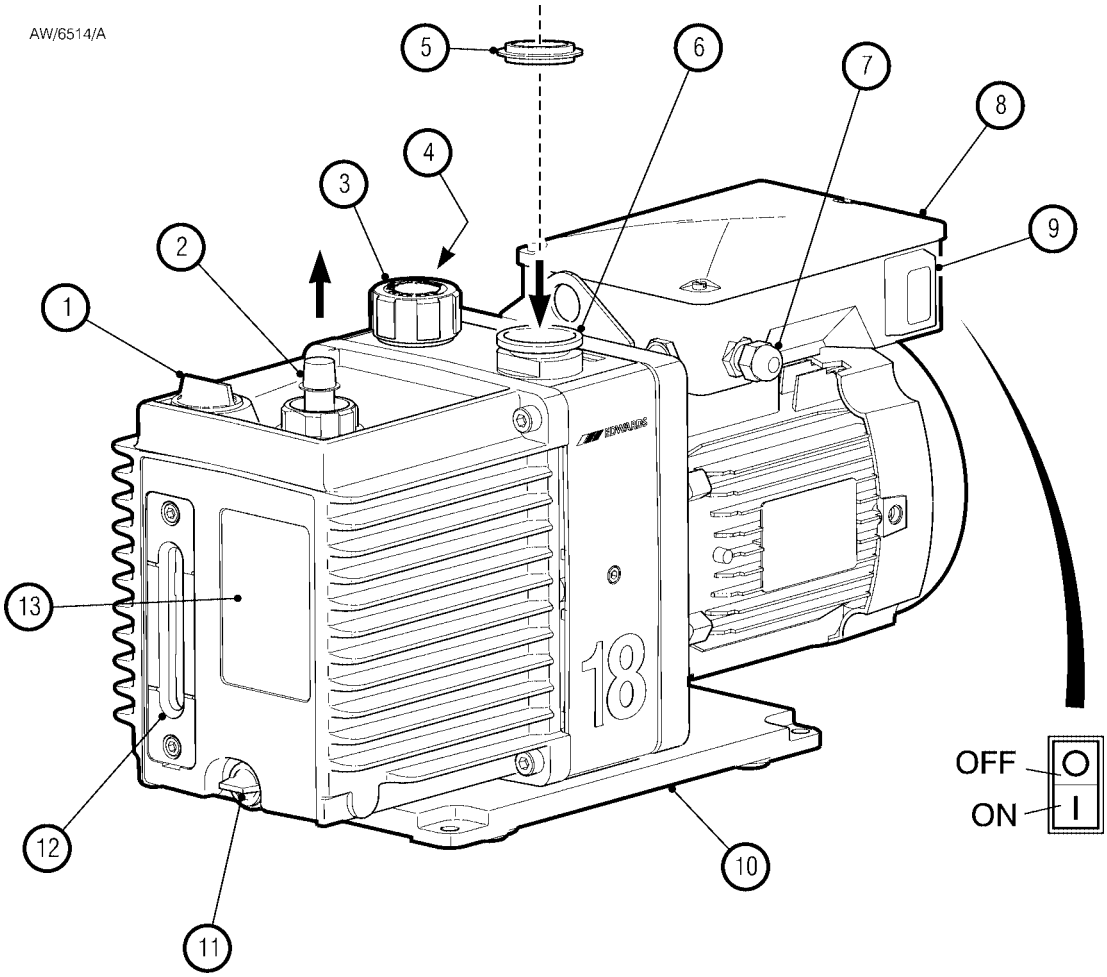

1		8	.
2		9	.
3		10	.
4		11	.
5		12	.
6		13	.
7			.

Note: The motor shown on this figure is not representative of the motor used on the E1/E2M18 pumps with Item Numbers A343-17-984 and A363-17-984. On these pumps, items 7 and 9 are transposed, with Item 7 being an IEC60320 16-20 Amp socket.

Fig re

2 TECHNICAL DATA

2.1 Operating and storage conditions

A A M i xi	13 C m C m 90% m
N I lti C N	45 C o m 57 o

o

T i bl

2.2 Performance

Note: Where total pressures are shown in the following technical data tables, measurements were taken using an untrapped total pressure capacitance diaphragm gauge on a header, as specified by Pneurop standards.

	E1M18	**E2M18**
M i xi 50 60	m 20 3 25 3	20 3 25 3
M i xi 50 60	m 17 3 20 3	17 3 20 3
M 50 60	o 1440 1720	1440 1720
U lti W ith	m 2 2	o1 1
W ith	3 3	o1 1
W ith	6 6 1	5 5
M i xi	m 5 3	20 2 3
M i xi	m	0
M i xi	m 1 1 5	0 1 1 5

T i bl

2.3 Mechanical data

M a	38 s
D i	S e e m
D e gr e e	
S ingl e	-
T hr e e	-
P i	N W 25 m
P i	15 m
th e	3 4

T a bl e

2.4 Electrical data

R e f

i s

EN 60269

ºC l

thi l s

Pump Item Number	Voltage (V)	Frequency (Hz)	Full load current (A)	Start current (A)	Maximum fuse rating (A)
A 343	200 380 200 460	50 50 60 60	3 1 2 1	16 10 15 10	10 6 10 6
A 363	200 380 200 460	50 50 60 60	3 1 3 1	16 10 15 10	10 6 10 6
M 50 60		o 0 0			

T a bl e

Pump Item Number	Voltage (V)	Frequency (Hz)	Full load current (A)	Start current (A)	Maximum fuse rating (A)
A 363 A 343	220 230	50 60	4 5	33 33	15 15
A 343	115 230	60 60	11 5	70 35	40 20
A 343	100 100 200 200	50 60 50 60	12 11 6 5	88 88 44 44	30 30 15 15
A 343	110 115 200 200	50 60 50 60	11 10 5 5	42 38 32 31	30 25 15 15

T a bl e

Pump Item Number	Voltage (V)	Frequency (Hz)	Full load current (A)	Start current (A)	Maximum fuse rating (A)
A 343				-	
A 343	220 220	50 60	5 5	35 35	15 15
M 50 60		o 0 0			

Table

2.5 Lubrication data

Note: A BOC Edwards Material Safety Data Sheet for the oil specified below is available on request.

Rec	o
Maxi	m
E1M 18	1 .
E2M 18	1 .

nden o

Table

Pump Item Number	Hz	Dimension (mm)				
Single		A	B	C	D	-
A 343						-
A 363						-
A 343						-
	60	520				
A 343						-
A 363						-
A 343						-
A 363						-
A 363						-
A 343	50					-
A 343						-
Three						-
A 343						-
A 363						-

1 .
2 .
3 .
4 .

Figure

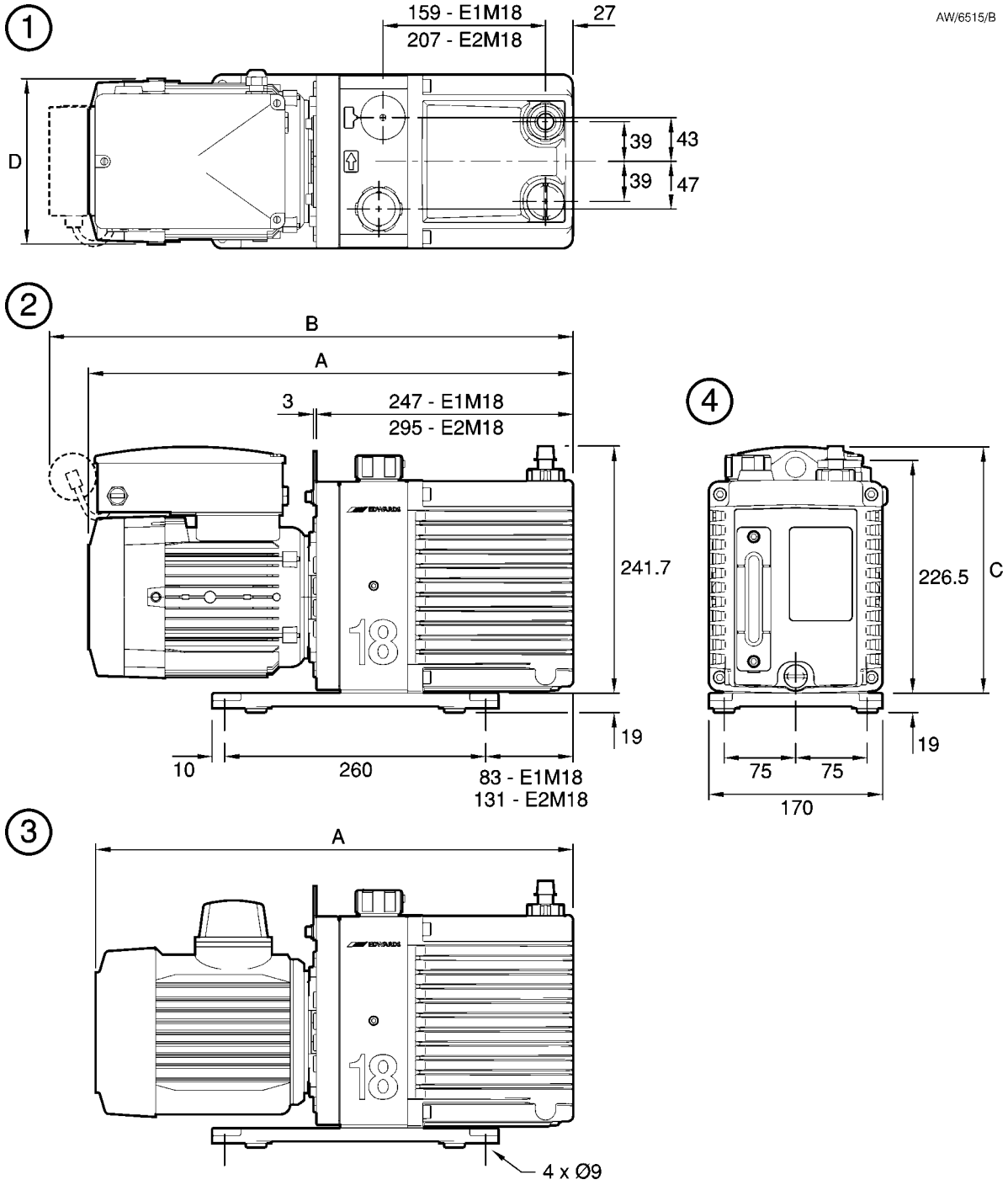
1
159 - E1M18
207 - E2M18
27
AW/6515/B
D
39
43
39
47
2
B
A
3
247 - E1M18
295 - E2M18
241.7
19
10
260
83 - E1M18
131 - E2M18
4
226.5
C
19
75
75
170
3
A
4 x Ø9

Figure

3 INSTALLATION

3.1 Safety

WARN

p
pr
gre a te r
d
in

WARN

Y
E2M 18

WARN

O b y
b l
pre c a ti
c a
e q ip

- A
- W e a r
  y
  c
- V e nt
  y
- En
  re la te
  pr
- D i
  p e
  th t
- S a
  th t

Y

a
re
p
P bli a ti

3.2 System design

C
p

- U
  the
  c
- A v
  the r
- te
  the
  e x e e d C m
  t
- M a o
  be c o
  i
  o
- P r s
  d f
  d a ng r
  intr o
  a v il a ble s
  o
  -
  s
  m
  f

3.3 Unpack and inspect

Re
and
y
day
with
n
D

Che
Table 7

the
c

3.4 Locate the pump

WARN

U

can
p

The
b k
.
s
vibrati e
h l
o
Pr
the o
and
c

end
ar C

p

Quantity	Description	Check (✓)
1	E1M 18	❑
Fitting		
1	N W 25	❑
1		❑
6	Receptacle	❑

Table

3.5 Fill the pump with oil

F ill
F ig re 1

1

2

the

M A X
d ra in

3

4

ha nd

3.6 Electrical installation: single-phase motors

W A R N

En

I
re q ire
t
e le c tri c a l

C A U T

En
y a g
d

3.6.1 Introduction

Note: The pump will restart automatically when the electrical supply is restored after an interruption and when the pump cools after it has overheated. If you do not want the pump to restart automatically, use electrical control equipment which must be reset manually.

s
En
c

.

T a ble 5 o
T a ble 8 m
c
.

T he .

T he
with
re g la ti
C

I

s
o
o

Pump Item Number	Voltage (V)	Frequency (Hz)	Connection details: refer to Figure
A 343 A 343 A 363			- - -
A 343	115 230	60 60	4 5 -
A 343	100 100 200 200	50 60 50 60	4 4 5 5 -
A 343			-
A 343			-

T a ble

3.6.2 Standard single-phase motors

1
b

2
te r
le a d thr
b

3
gla nd

4

5

6

- U
  1 2
- U
  2 2

7
a nd

8
a ppr
5

9
I ntil
grippe d

10
the n

3.6.3 Amphenol version single-phase motors

W he n
c that o

F o
c e rti f
e a rth
a nd
c o

C o
a ppr o

3.6.4 110/200-240 V 50 Hz or 115-120/200-230 V 60 Hz single-phase motors

T he .
o

T he .
n m
240 V o
o

U .
v .
y

1 .
f
.
the .

2 f
s
p . .

pre s
p . .

3 .
the

W he n .
ple a o
.

C S A .
.
.

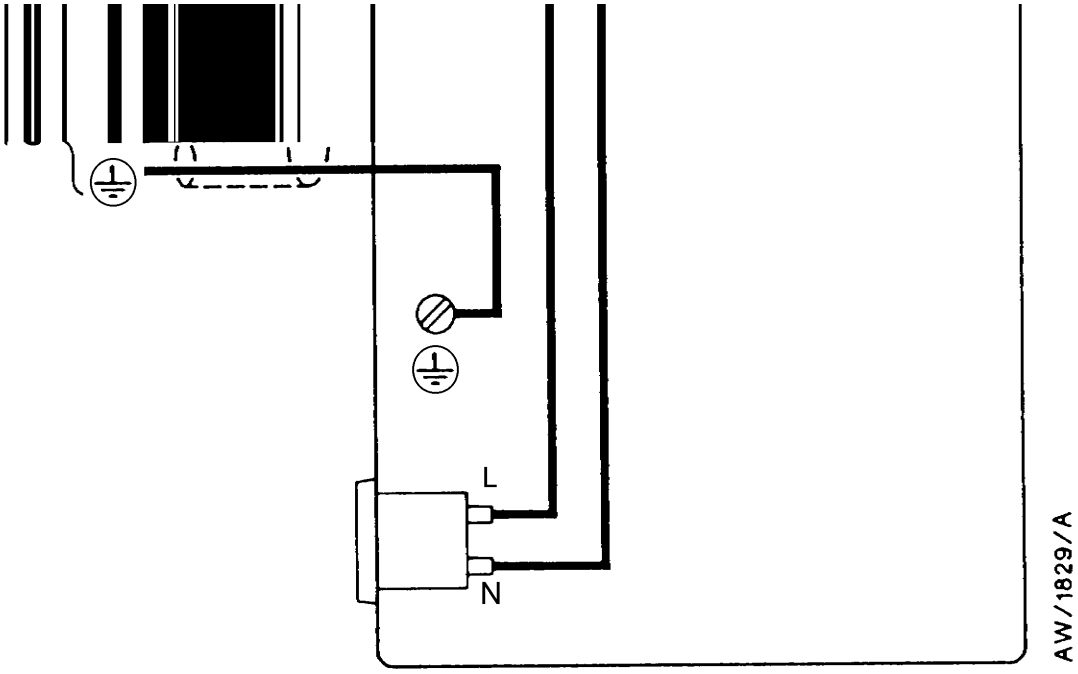

Fig re

220

-

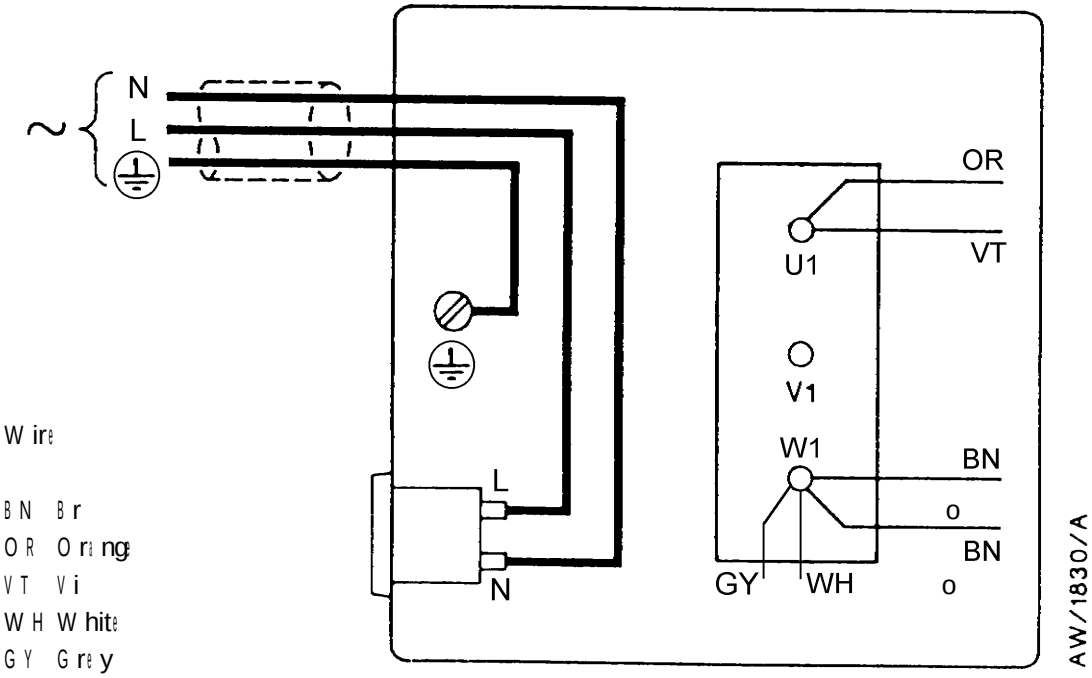

W ire

BN Br
OR O ra ng
VT Vi
WH W hite
GY G re y

Fig re

100

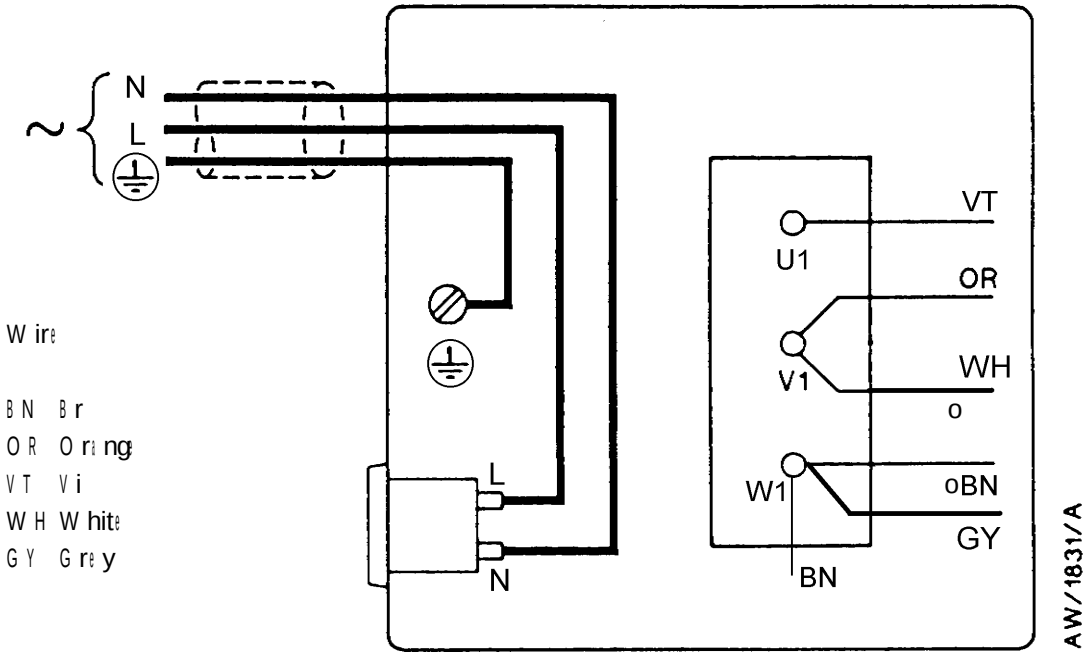

Wire

BN Br
OR Orange
VT Vi
WH White
GY Grey

Figure 200

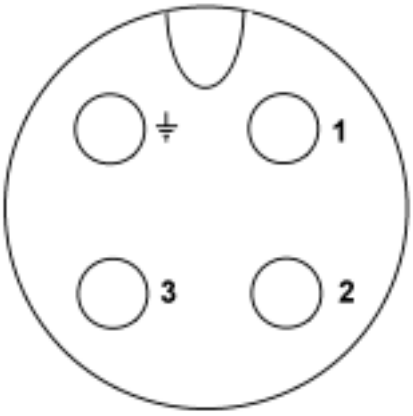

Pin

1 Live
2 Neutral
3 N o
⏚ Earth

Figure 220 -

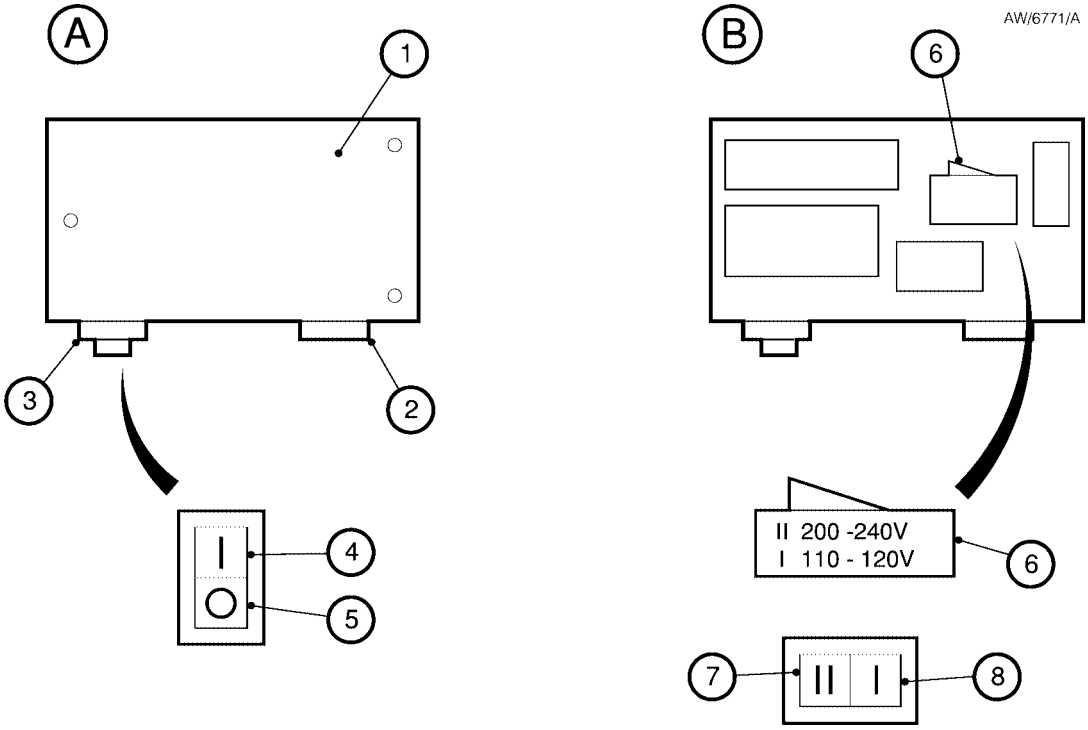

A T	1		o
B	2		I
	3		
	4	I'	
	5		
	6		
	7	II'	
	8	I'	

F ig re c ti

110 /

3.7 Electrical installation: three-phase motors

3.8 Connect the electrical supply to the motor

WARN

En

I
re q ire
t
e le c tri c a l

CAUT

En
y a g
d

Note: The pump will restart automatically when the electrical supply is restored after an interruption. If you do not want the pump to restart automatically, use electrical control equipment which must be reset manually.

W e

bre a
whic h
ra ting
a re
the r ti
d i

tha t
c u rre nt
a ppr c t
c

T he
c a ble

I

1
b

2
te r
le a d thr
b

3
d ia gra

p

4 pply
c a ble
te r

5
the I

6
c s
c o
o

3.8.1 Check the direction of rotation

CAUT

En
d ire c ti

the

k o

1
the s
c
m o
e le c tri c a l f

2 f
c
s
r o
o
- S wit c h
-
- R e m
wire o
- R e
.
o

3.9 Connect the pump inlet

T a
c
S e c ti
be l

- F
  pipe line
  n
- S u pp
  l
- y
  tra n
  l
  be ll
  be ll
  ra ting
  pre
  El wa rd
- U
  c
- En

C

- C
  the
- R e
  1
- U
  a va il ble
  S e c ti

3.10 Connect the pump outlet

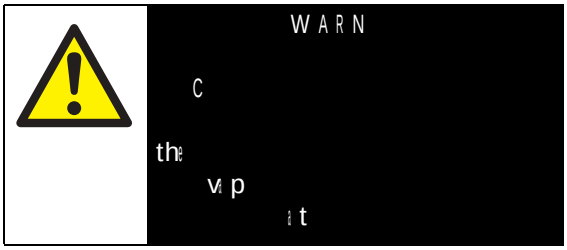

W A R N

C
the
va p
a t

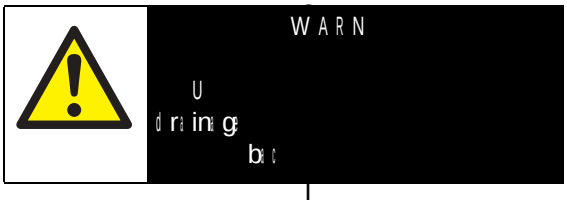

W A R N

U
d ra in a ge
bo c

T he
e xc e e d
a t

W e
p

- c
- gre a te r
- a t

T he
p

T
t

- C
  pla
  ite
- R e
  3 4
- R e
  a n
  the n

o s
o 5
o
o
s
s s
s
o
f
s
s

o
(

o
m
s
o

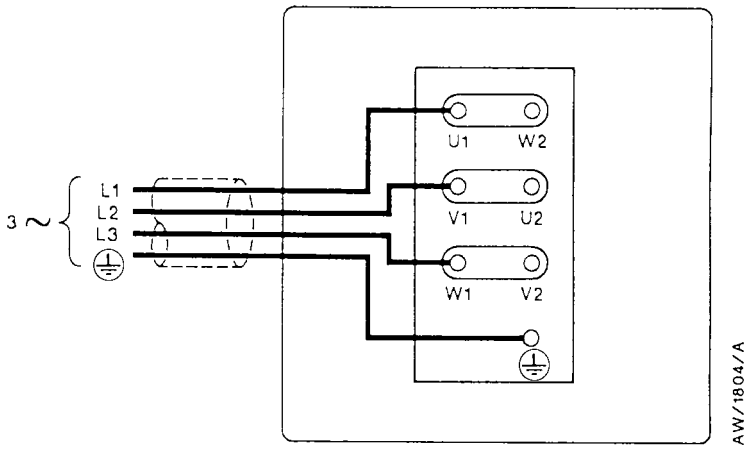

Fig re a

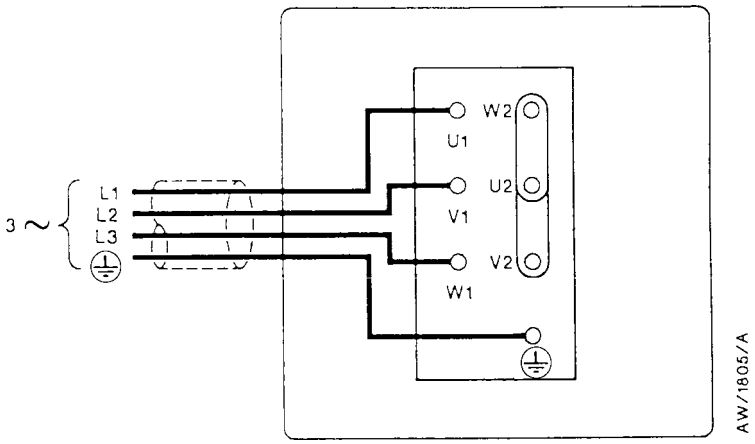

Fig re

3.11 Gas-ballast inlet connection

The
Figure 1
f
debris s
l
s
ballast s
1 .
2 1/4 . /
BSP

3.12 Leak test the system

Leak
y o
s
the

4 OPERATION

4.1 ATEX directive implications

4.1.1 Introduction

T hi
re q ire
a c c
P a rlia
tha
c
inte nd e d
a t

T he
igniti
A T EX
p
e q ip

e xpl

T he re
p
p
pre d ic ta ble
D ire c tive
d e

n

li
a v

tha ir

4.1.2 Flammable/pyrophoric materials

W A R N

Y
ta
be l
d

m

W he n
pre

o
m

- N
- En
- U
  nitr

o

m

o

m

o

i
c
in
tha n
e xpl

f

o

- U
  be lla
  c
  p

m
o

.

s
o
o
m
m
o
m
m

4.1.3 Gas purges

WARN

danger
en
an

WARN

Y
ta
be l
d

Switch
pu

pr
vap
exhau

pre
purge
liqu id
in
carried

When
required
rate

t

c

C
the

pu

Note: *We recommend that you obtain and read the Vacuum Pump and Vacuum System Safety manual (publication number P300-20-000), available from BOC Edwards or your supplier.*

4.2 Gas-ballast control

U
change

U

- T
- T

Turn
cl diti
pu
when

m
Turn s
anti o
o
s

- T
  vap l
- T s

When
c
l
return

o
o
s
o

o

s
m

4.3 Start-up

WARN

D
ll
b

in

ta C

v

the
will

1
MAX
level

2
p

3 al

4

5
with
appr
inlet
5

6
p
dec
pr
re

4.4 To achieve ultimate vacuum

die

the
vacui
be
the
p
per
cal

- Y
gi gi

- Y
rec
the
vacui

l
m o ,
s
o
o
s
o
o

.

U
vacui

.

1 o

2 .

.
h s
s

3 .

4
p o
m

.
m
o
o
s
s

4.5 To pump condensable vapours

U
the re
the

1

2

t
c

3

c
bo lla

A
c a n
pr

4.6 To decontaminate the oil

T he
c l
pr
d e c

1
gla
d i
S te p

2

3

4

4.7 Unattended operation

T he
u nd e r
S e c ti
c he c
tha n
pa
pa

S ingle
T he
W he n s
d e vic e
d e vic e
c
re .

.
W he n f
pa o
the r o
ne c e
g .
o
s

4.8 Shut-down

Note: If the gas-ballast control is open and the pump is switched off for any reason, the pump drive shaft may rotate in the reverse direction, causing a system pressure rise. To prevent this, use a gas-ballast control valve (refer to Section 7.3.14).

W e o
bo l o ina te
o
pa .

1 s
a s

2
a lre a d y .

3 .
c .

4

o
k

m
m

5 MAINTENANCE

5.1 Safety information

WARN

Obey
bel
precauti
cai
equip

- A
- En
  rel te
  pr
- All
  be
- the
- A
  p
- D
  da
- The
  with
  p
  p
  and
  pr
- Lea
  i
  di
- D
  brea
  which
  heated C
  brea
  Fl

  Material

  req
  Edwards
  m

5.2 Maintenance plan s

f

The
r o

each o
f

M l
p
and s
rec f
year m
acc s

When o
m
c

m
m

Exa

p o
acce s
pr k
s
s
s

Operation	Frequency	Refer to Section
Chec		k
Replace		
	l	
Clean		
Clean		
Clean		
Fit		
Te		s

Table

5.3 Check the oil level

Note: If required, you can check the oil-level while the pump is operating , however you must switch off the pump and isolate the pump and other components in the pumping system from the electrical supply before you pour oil into the pump.

Re

1 i
the

2 iller

the
the
and
the

3 p

5.4 Replace the oil

Re

1 p
all

2 f y
and .

3 s

4 t .
under m -
Re m
drain

5

- Replace
int .
- Rec m
and
- Di
- Repeat

6 re c

7 the re a c ha

8 p

5.5 Inspect and clean the inlet-filter

o

R e

.

1 'O ' s

o

2 A ll .

m

3 f

a nd

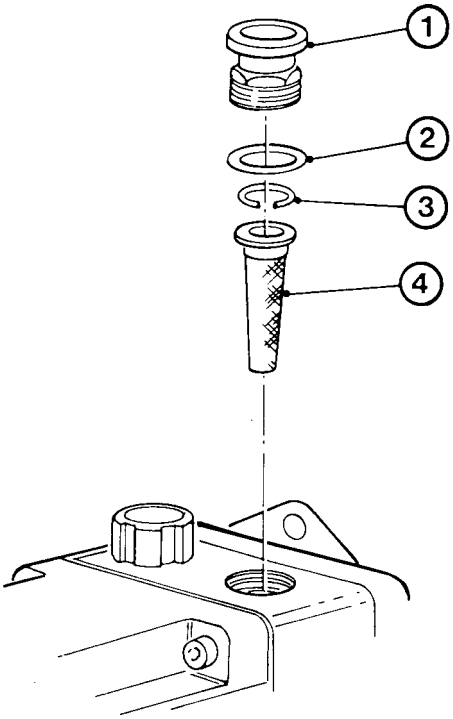

1 .
2 .
3 .
4 .

F ig re

5.6 Clean the gas-ballast filter

Note: You may have removed the gas-ballast filter to connect a gas supply or valve to the gas-ballast inlet.

Re

1

2

ele

3

cleaning

t

4

the

retainer

5.7 Clean the motor fan-cover and enclosure

clean

and

f

1

electrical .

2 .

dep m

.

5.8 Clean and overhaul the pump

Clean o

in . the

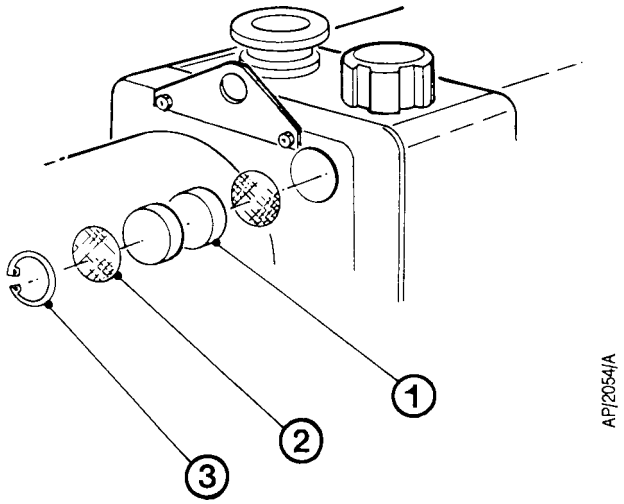

1 .
2 .
3 .

Fig re

5.9 Fit new blades

Fit
in
Section

5.10 Test the motor condition

Te
re
l
equip

- Earth Ω
- Ω

5.11 Fault finding

A
pr
ba

guide
Edwards

5.11.1 The pump has failed to start

- The
- The
- The
the
- The
- The C
- The
- The
- The
been
c
- The

5.11.2 The pump fails to achieve specified performance (failure to reach ultimate vacuum)

s

- Y o
un
- There
- The s
s
- The
o
- Y m

- The
- The l .
- The
- The l
m
- The
- The
- The
direction o
s

5.11.3 The pump is noisy

l

- The ,
- The s
and
- The
- The
- The
- One

o .

o

5.11.4 The pump surface temperature is above 100 °C

- The
- The
  h o
- The
- The
- The
- The
- The
- The
- The
  i s

5.11.5 The vacuum is not maintained after the pump is switched off

- The
- 'O '
- The

5.11.6 The pumping speed is poor

- The
  d ia m
- The
- The

5.11.7 There is an external oil leak

- The
- The
- The re
- The re

6 STORAGE AND DISPOSAL

6.1 Storage

CAUT

Ob
in
da

Note: If you will store a new pump in conditions of high humidity, remove the pump from its cardboard packaging box; dispose of the box (refer to Section 6.2).

U

1 Sectio

2

3 dry
y

4

5 inlet

6 required

When
de
y
in the

6.2 Disposal

Di
re
all
require
I

Ta
s

- C
  with m
- C
  with

D
ring
s
.
o
.
.
o
.
.
.
s
f
o
s

7 SPARES AND ACCESSORIES

7.1 Introduction

BOC
available
Brazil
K
w

Underg
c

Order
nearre
When

- M
- Serial
-

7.2 Spares

The
the

I

U

,
with o hal
renew o
o

7.3 Accessories o

o
A
E2M 18
s
The

Ni o

I

Spare	Item Number
Clean	A 363
E1M 18	A 343
E2M 18	A 363
Ultragrade	H 110
Capacit	A 505

o

Table

Spare	Item Number
	A 441
	A 442
	A 445
	A 444
EMF 20	A 462
PV 25EK	C 413
PV 25EK	C 413
FL 20K	A 133
Vibrati	A 248
ODE^{1} 4	A 505
Pi	C 105
Flexible	C 105
Pi	C 105
Ga	A 500
Ga	A 500
Ga	A 500

I
I
I
I
o
/
m
m
s
s
s

Table

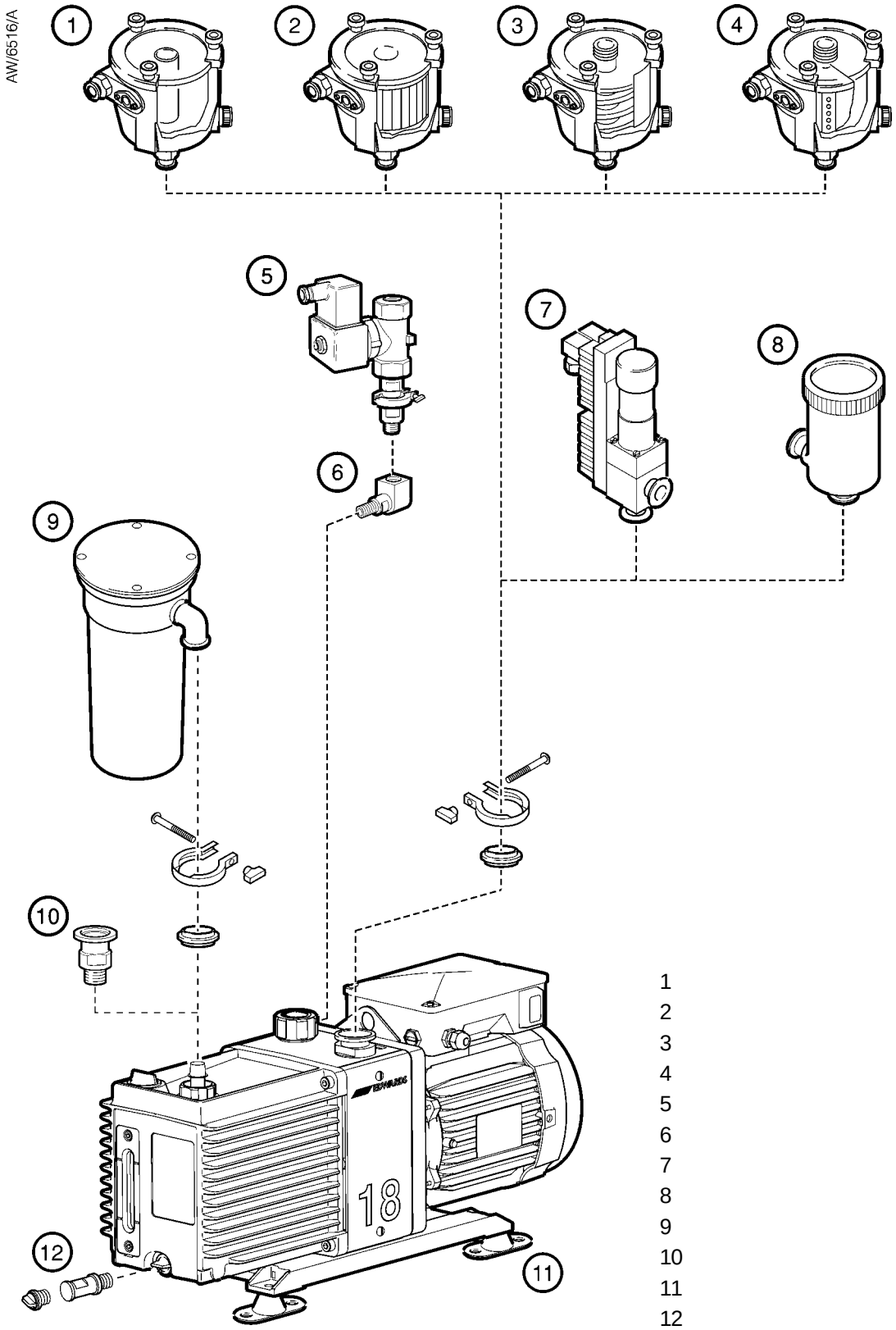

1
2
3
4
5
6
7
8
9
10
11
12

Fig re

7.3.1 Inlet Catchpot

T he
pre v e nt

7.3.2 Inlet Dust Filter

T he
a br a

7.3.3 Inlet Desiccant Trap

U
q u a ntitie
t

7.3.4 Inlet Chemical Trap

T he
c he

7.3.5 Outlet Mist Filter

T he
d r
d i
t

7.3.6 Solenoid Operated Pipeline Valve

F it
a nd
pr

7.3.7 Foreline Trap

U
pre v e nt
int

7.3.8 Vibration Isolators

T he
vibr a ti

7.3.9 Oil Drain Extension

F it
p s
d r a in a g

7.3.10 Pump Inlet Adaptor

T hi s

a d a pt
b
s

7.3.11 Flexible Bellows s

o
U
y
b e ll

7.3.12 Pump Outlet m Adaptor

T hi 3 4
a d p a t
3 4
in c h o
s

7.3.13 Gas Ballast Banjo/Elbow Assembly

U 3 4

7.3.14 Gas Ballast Valve

o
U
a l
s
o
o
m
m

BOC EDWARDS

Form HS1

Return of BOC Edwards Equipment - Procedure

INTRODUCTION

Before returning your equipment, you must warn BOC Edwards if substances you used (and produced) in the equipment can be hazardous. This information is fundamental to the safety of our Service Centre employees and will determine the procedures employed to service your equipment.

Complete the Declaration (HS2) and send it to BOC Edwards before you dispatch the equipment. It is important to note that this declaration is for BOC Edwards internal use only, and has no relationship to local, national or international transportation safety or environmental requirements. As the person offering the equipment for shipment, it is your responsibility to ensure compliance with applicable laws.

GUIDELINES

- Equipment is '**uncontaminated**' if it has not been used, or if it has only been used with substances that are not hazardous. Your equipment is '**contaminated**' if it has been used with any substances classified as hazardous under EU Directive 67/548/EEC (as amended) or OSHA Occupational Safety (29 CFR 1910).
- If your equipment has been used with radioactive substances, biological or infectious agents, mercury, polychlorinated biphenyls (PCB's), dioxins or sodium azide, you must decontaminate it before you return it to BOC Edwards. You must send independent proof of decontamination (for example a certificate of analysis) to BOC Edwards with the Declaration (HS2). Phone BOC Edwards for advice.
- If your equipment is contaminated, you must either:
  - Remove all traces of contamination (to the satisfaction of laws governing the transportation of dangerous/hazardous substances).
  - Or, properly classify the hazard, mark, manifest and ship the equipment in accordance with applicable laws governing the shipment of hazardous materials.

Note: Some contaminated equipment may not be suitable for airfreight.

PROCEDURE

1. Contact BOC Edwards and obtain a Return Authorisation Number for your equipment.
2. Complete the Return of BOC Edwards Equipment - Declaration (HS2).
3. If the equipment is contaminated, you must contact your transporter to ensure that you properly classify the hazard, mark, manifest and ship the equipment, in accordance with applicable laws governing the shipment of contaminated/hazardous materials. As the person offering the equipment for shipment, it is your responsibility to ensure compliance with applicable law. **Note: Equipment contaminated with some hazardous materials, such as semiconductor by-products, may not be suitable for airfreight - contact your transporter for advice.**
4. Remove all traces of hazardous gases: pass an inert gas through the equipment and any accessories that will be returned to BOC Edwards. Where possible, drain all fluids and lubricants from the equipment and its accessories.
5. Seal up all of the equipment's inlets and outlets (including those where accessories were attached) with blanking flanges or, for uncontaminated product, with heavy gauge tape.
6. Seal equipment in a thick polythene/polyethylene bag or sheet.
7. If the equipment is large, strap the equipment and its accessories to a wooden pallet. If the equipment is too small to be strapped to a pallet, pack it in a suitable strong box.
8. Fax or post a copy of the Declaration (HS2) to BOC Edwards. The Declaration must arrive before the equipment.
9. Give a copy of the Declaration (HS2) to the transporter. You must tell your transporter if the equipment is contaminated.
10. Seal the original Declaration in a suitable envelope: attach the envelope securely to the outside of the equipment package, in a clear weatherproof bag.
    WRITE YOUR RETURN AUTHORISATION NUMBER CLEARLY ON THE OUTSIDE OF THE ENVELOPE OR ON THE OUTSIDE OF THE EQUIPMENT PACKAGE.

BOC EDWARDS

Form HS2

Return of BOC Edwards Equipment - Declaration

Return Authorisation Number:

You must:

- Know about all of the substances which have been used and produced in the equipment before you complete this Declaration
- Read the Return of BOC Edwards Equipment - Procedure (HS1) before you complete this Declaration
- Contact BOC Edwards to obtain a Return Authorisation Number and to obtain advice if you have any questions
- Send this form to BOC Edwards before you return your equipment

SECTION 1: EQUIPMENT

Equipment/System Name_____

Part Number _____

Serial Number_____

Has the equipment been used, tested or operated ?

YES ❑ Go to Section 2 NO ❑ Go to Section 4

IF APPLICABLE:

Tool Reference Number_____

Process _____

Failure Date_____

Serial Number of Replacement Equipment_____

SECTION 2: SUBSTANCES IN CONTACT WITH THE EQUIPMENT

Are any substances used or produced in the equipment:

- Radioactive, biological or infectious agents, mercury, poly chlorinated biphenyls (PCBs), dioxins or sodium azide? (if YES, see Note 1) YES ❑ NO ❑
- Hazardous to human health and safety? YES ❑ NO ❑

Note 1 : BOC Edwards will not accept delivery of any equipment that is contaminated with radioactive substances, biological/infectious agents, mercury, PCB's, dioxins or sodium azide, unless you:

- Decontaminate the equipment
- Provide proof of decontamination

YOU MUST CONTACT BOC EDWARDS FOR ADVICE BEFORE YOU RETURN SUCH EQUIPMENT

SECTION 3: LIST OF SUBSTANCES IN CONTACT WITH THE EQUIPMENT

Substance name	Chemical Symbol	Precautions required (for example, use protective gloves, etc.)	Action required after a spill, leak or exposure

SECTION 4: RETURN INFORMATION

Reason for return and symptoms of malfunction _____

_____

If you have a warranty claim:

- who did you buy the equipment from ? _____
- give the supplier's invoice number_____

SECTION 5: DECLARATION

Print your name:_____Print your job title:_____

Print your organisation:_____

Print your address:_____

_____

Telephone number: _____Date of equipment delivery: _____

I have made reasonable enquiry and I have supplied accurate information in this Declaration. I have not withheld any information, and I have followed the Return of BOC Edwards Equipment - Procedure (HS1).

Note: Please print out this form, sign it and return the signed form as hard copy.

Signed: _____Date_____

This page intentionally blank.

UNITED KINGDOM

CORPORATE HEADQUARTERS
BOC EDWARDS
Manor Royal
Crawley
West Sussex
RH10 9LW
Tel +(44) 1293 528844
Fax +(44) 1293 533453

BOC EDWARDS
Wingates Industrial Estate
Great Bank Road
Westhoughton, Bolton
Lancashire
BL5 3SL
Tel +(44) 1942 652652
Fax +(44) 1942 652651

AMERICA (USA)

USA HEADQUARTERS
BOC EDWARDS
One Edwards Park
301 Ballardvale Street
Wilmington, MA 01887
Tel +(1) 978 658 5410
Toll free (USA only) 1 800 848 9800
Fax +(1) 978 658 7969

3901 Burton Drive
Santa Clara, CA 95054
Tel +(1) 408 496 1177
Fax +(1) 408 496 1188

1810 West Drake Drive
Suite 101
Tempe, AZ 85283
Tel +(1) 602 777 7007
Fax +(1) 602 777 2244

11701 Stonehollow Drive
Suite 100
Austin, TX 78758
Tel +(1) 512 491 6622
Fax +(1) 512 491 0629

3501 Island Avenue
Philadelphia, PA 19153
Tel +(1) 215 365 8653
Fax +(1) 978 753 6846

BELGIUM

BOC EDWARDS
Bergensesteenweg 709
B1600 Sint-Pieters-Leeuw
Brussels
Tel +(32) 2 363 0030
Fax +(32) 2 363 0064

BRAZIL

BOC DO BRASIL LTDA
DIVISÃO EDWARDS ALTO VACO
Rua Bernado Wrona 222
02710 São Paulo-SP
Tel +(55) 11 3952 5000
Fax +(55) 11 3965 2766

CANADA

BOC EDWARDS
5975 Falbourne Street
Mississauga, Ontario L5R3W6
Canada
Tel +(1) 905 501 2558
Fax +(1) 905 501 1632

12055 Cote de Liesse
Dorval, Quebec H9P1B4
Canada
Tel +(1) 514 631 3501
Fax +(1) 514 631 3502

CHINA

BOC TRADING
(SHANGHAI) CO. LTD.
23 Fu Te Road (N)
Wai Gao Qiao Free Trade Zone
Pudong
Shanghai, 200131
PRC China
Tel +(86 21) 5866 9618
Fax +(86 21) 5866 9993

FRANCE

BOC EDWARDS
125 Avenue Louis Roche
92238 Gennevilliers, Cedex
Paris
Tel +(33) 1 47 98 24 01
Fax +(33) 1 47 98 44 54

GERMANY

BOC EDWARDS
Ammerthalstraße 36
85551 Kirchheim
Munich
Tel +(49) 89 99 19 18 0
Fax +(49) 89 99 19 18 99

HONG KONG S.A.R.

BOC EDWARDS (ASIA)
12 Chun Yat Street
Tseung Kwan O Industrial Estate
Tseung Kwan O, Kowloon
Hong Kong S.A.R.
Tel +(852) 2372 2640
Fax +(852) 2796 9095

INDIA

BOC EDWARDS
DIVIN. OF BOC INDIA LIMITED
203 Surya Kiran Building
19 Kasturba Gandhi Marg
New Delhi - 110 001
India
Tel +(91) 11 851 0065
Fax +(91) 11 851 0245

ISRAEL

EDWARDS ISRAEL VACUUM LTD.
5 Habarzel Blvd
Gat 2000 Industrial Zone
Qiryat Gat 82000
Tel +(972) 8 681 0633
Fax +(972) 8 681 0640

ITALY

BOC EDWARDS
Via Carpaccio 35
20090 Trezzano sul Naviglio
Milan
Tel +(39) 02 48 4471
Fax +(39) 02 48 401638

JAPAN

HEADQUARTERS
BOC EDWARDS
Shuwa Shiba Park Building A-3F
2-4-1 Shibakoen Minato-ku
Tokyo, 105-0011
Tel +(81) (0) 3 5470 6530
Fax +(81) (0) 3 5470 6521

KOREA

HEADQUARTERS
SONGWON EDWARDS LTD.
5th FL. Daewoo Engineering Bldg.
Soonae-dong
Bundang-gu, Sungnam City
Kyungki-do, Korea
Tel +(82) 31 716 7070
Fax +(82) 31 738 1001-3

FACTORY & GV
SONGWON EDWARDS LTD.
625-7 Upsong-dong
Chunan City
Chungchong Nam-do
Korea
Tel +(82) 41 621 7070
Fax +(82) 41 621 7700

SINGAPORE

BOC EDWARDS (ASIA)
42 Loyang Drive
Loyang Industrial Estate
Singapore 508962
Tel +(65) 6546 8408
Fax +(65) 6546 8407

TAIWAN, R.O.C.

EDWARDS TECHNOLOGIES
LIMITED
No. 434 Chung hua Road
Toufen Town, Miaoli County
Taiwan ROC
Tel +(886) 37 611422
Fax +(886) 37 611401

P800-80-000 Issue J 01A09-010

PLEASE CONTACT ANY OF THESE COMPANIES FOR DETAILS OF OTHER SALES AND SERVICE CENTRES IN YOUR AREA.

Produced by Technical Publicity Techpublicity@edwards.boc.com

http://www.bocedwards.com
info@bocedwards.com

BOC EDWARDS

PDF